G*GRASS®

# **DWD XP** DRAWER SYSTEM

The convenient and versatile
comprehensive drawer range.

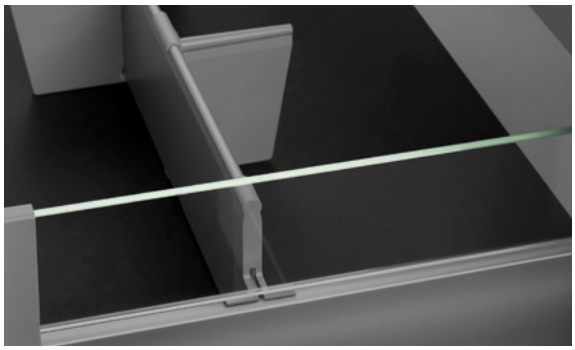

The DWD XP drawer system looks good,
is variable and is easy and compact to assemble.

**Modern add-on systems permit high, closed side walls and a linear visual design.**

With the Duowing double-wall add-on system the timeless DWD XP drawer sides can be elegantly extended upwards, providing more support for your storage items.

# **DWD XP** DRAWER SYSTEM

DWD XP offers all ingredients for individual styling and convenience in the modern kitchen. The intelligent comprehensive drawer range features numerous drawer versions, two inset panels and versions in three colours to satisfy a wide range of customer wishes. Its clever assembly details make DWD XP a reliable partner for building kitchen furniture.

**In combination with the GRASS comfort systems Tipmatic Plus and Sensomatic, DWD XP full extension slides can be moved with the utmost comfort.**

In addition to the two DWD XP classics in white and aluminium-metallic, the compact drawer system is also available in stone for variation in colour.

**Variability is one of the features of this comprehensive drawer range.**

This also applies to the choice of colours. The powder-coated drawer sides are not only available in the classic colours white and aluminium-metallic but also in a striking stone finish for attractively styled kitchen furniture.

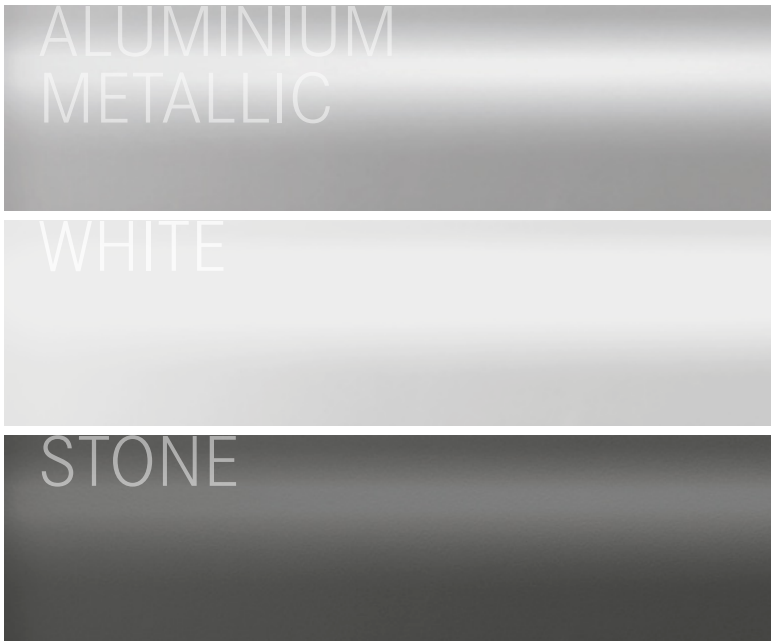

**The transparent solution for timeless, attractive drawers.**

The GRASS TOP add-on provides elegant transparency. With the use of different materials such as glass, plastic or wood this system offers the utmost individuality with clever highlights.

## **DWD XP** DRAWER SYSTEM

# The perfect complement: add-on, dividing and organising systems for DWD XP drawers.

To keep the content of regular and pot drawers in order for everyday use in the kitchen – that is what our customisable dividing systems are designed for. In combination with DWD XP Duowing and Magic Classic, pot drawers can be variably subdivided. The closed and flexibly usable Magic Optima elements ensure that everything remains in its place.

**Neatly stored means readily found. And GRASS systems make it all so much easier. Because every item is always neatly arranged for convenient access.**

Good to know the movement is not only technically functional, but also extremely comfortable. Opening and closing is an experience every time.

It was never easier to open drawers. And it was never more satisfying to close them. The GRASS comfort systems and our movement solutions complement each other to form a harmonious multi-functional unit. We want to combine the advantages of handle-free opening with the elegance of damped closing, as the combination of these exceptional functions guarantees the highest possible level of operating comfort.

**It's good to find things that were simply made for each other.**

**TIPMATIC**
OPENING SYSTEM

Mechanical opening of
regular and pot drawers.

Tipmatic opens up optimum design options for furniture with high design and visual demands. With the touch-activated mechanism, large, handle-free fronts are possible that will open with a gentle tap. Optimum access and a reliable catch function make Tipmatic a comfort system for high standards.

**SOFT-CLOSE**
DAMPING SYSTEM

With the GRASS Soft-close damping concept, each movement becomes an experience. Because closing drawers with Soft-close is something special. Soft-close gently slows the fronts and pulls them to the fully closed position.

**With the very low pull-out forces, slender handles are also possible.**

**SENSOMATIC**
OPENING SYSTEM

Electro-mechanical opening of drawers for maximum operating comfort.

Action. Reaction. Interaction. Comfort cannot be more fascinating. Thanks to Sensomatic's automatic touch-sensitive function, a gentle trigger is enough to initiate the movement of regular and pot drawers with handle-free fronts.

**DWD XP** DRAWER SYSTEM

## The appeal of our products lies in the fact that their high quality has been proven in practice.

**FLAT-PACK SET PACKAGING.**

**Passion is revealed right from the beginning – in the packaging. In the practical set everything is ready at hand that is needed for a first-class drawer system.**

We focus on the essentials – not only in the design but also in the packaging of all components. “Better clear than complicated” – that is our motto. That is why we have packaged the DWD XP drawer system as a neat and space-saving flat-pack unit. In that way, everything is ready at hand for you to start immediately.

# DRAWER SYSTEMS

Versatile drawer range for
individual design options.

DWD XP **11**

Double-wall metal drawer sides with an elegant design with functional add-on systems.

DWD XP FLAT PACKS **58**

DWD XP drawer system in a neat and space-saving set.

DWD XP SENSOMATIC **81**

Electromechanical opening system for regular and pot drawers.

DWD XP DIVIDING AND ORGANISING SYSTEMS **103**

Organising, dividing, fitting out – useful aids for organising storage space.

ASSEMBLY TECHNOLOGY **124**

Installation and assembly aids. Tried-and-tested technology for professional cost-effectiveness.

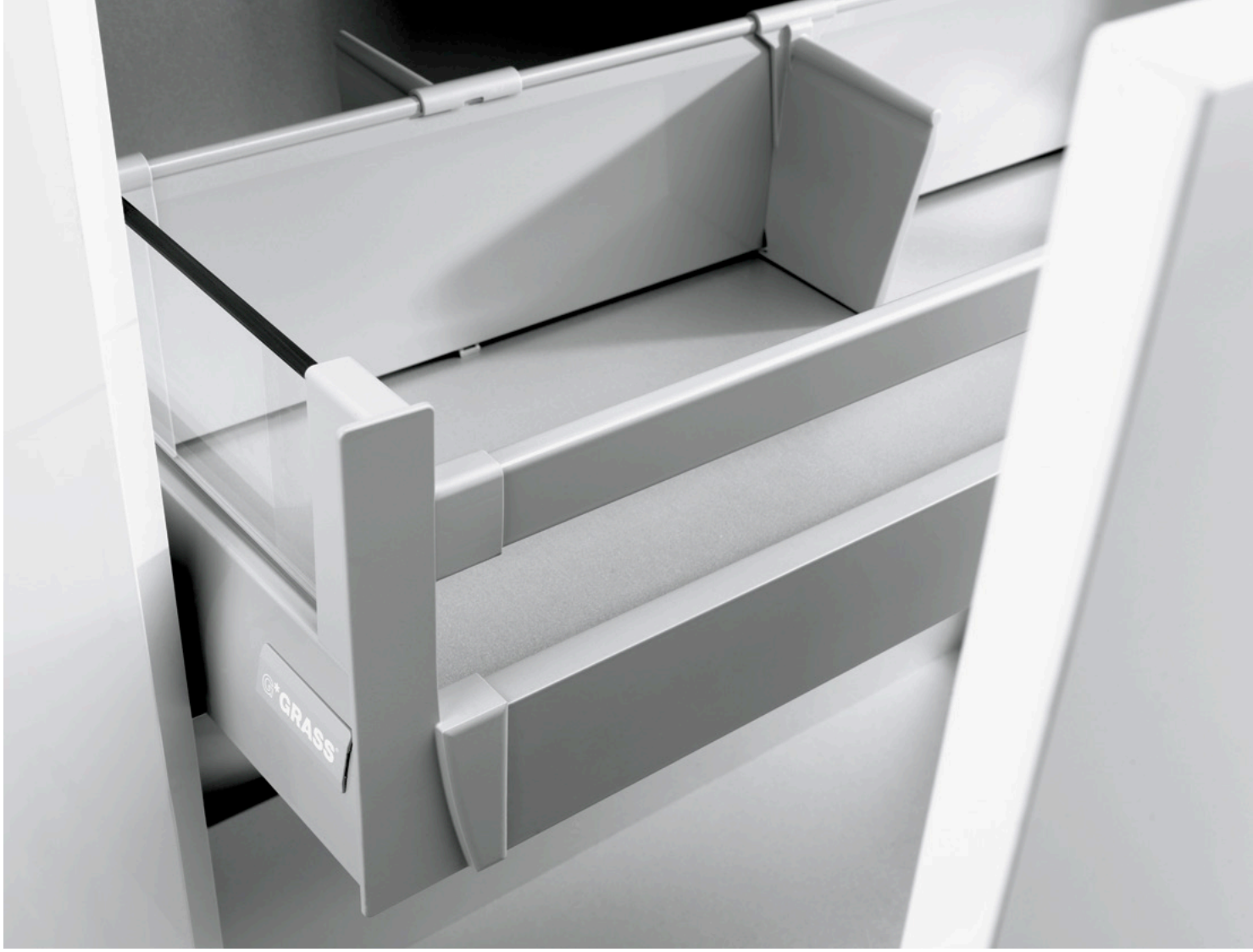


**DWD XP** DRAWER SYSTEM

## **Variety of the finest quality:** a range of material, colour and design combinations – all harmoniously coordinated – these are the ingredients for individuality, comfort and lifestyle.

QUALITY CERTIFICATE
LGA

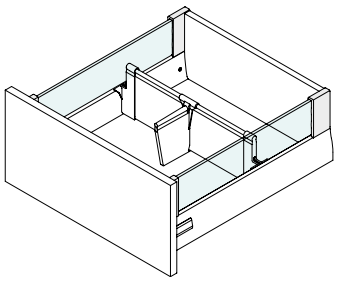

**DWD XP TOP – the crystal clear solution for timeless attractive drawers.**

Generous use of materials for more design freedom. The GRASS TOP add-on provides transparency to look inside. Various materials such as glass, plastic or wood can be used over large areas. Simply the most beautiful solution for an add-on.

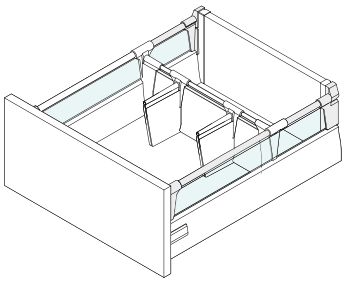

**Variowing – more storage space and design variation.**

Personal taste is everything. That's why we make the practical add-on variant. Whether you opt for glass, acrylic or aluminium, the desired side elements can be simply attached with the profile clips on the round railing. Looks good and keeps the stored items in place.

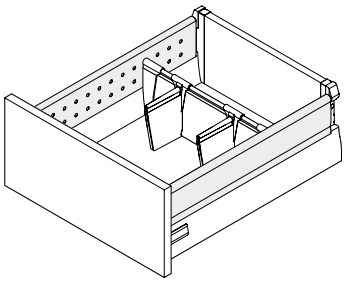

**Duowing – the compact container solution for stored items.**

DWD XP Duowing for high, solid side sections, without any significant effort. Simply clip over the round railing onto the drawer side – done! In this way, the steel side sections provide a good-looking, solid separation and stable protection for stored items.

# **DWD XP** DRAWER SYSTEM

Elegantly designed double-wall metal drawer sides
for the discerning user.


| Product designation | Page |
|---|---|
| Drawer H95 | 16 |
| Pot drawer H95 with rectangular railing | 18 |
| Pot drawer H95 with round railing | 22 |
| Pot drawer H95 with with TOP add-on | 32 |
| F8 inset drawer H95 | 34 |
| F8 inset drawer H95 with rectangular railing | 36 |
| F8 inset drawer H95 with round railing | 38 |
| F8 inset drawer H95 with TOP add-on | 40 |
| Inset drawer H95 | 42 |
| Inset drawer H95 with rectangular railing | 44 |
| Inset drawer H95 with round railing | 46 |
| Inset drawer H95 with rectangular railing and TOP add-on | 48 |
| DWD XP full extension slide 40 kg Soft-close | 50 |
| DWD XP full extension slide 60 kg Soft-close | 52 |
| DWD XP full extension slide 40 kg Tipmatic | 54 |
| DWD XP full extension slide 60 kg Tipmatic | 56 |
| Drawer H95 – flat pack | 58 |
| Pot drawer H95 with rectangular railing – flat pack | 60 |
| Pot drawer H95 with round railing – flat pack | 62 |
| Variowing | 64 |
| Duowing | 66 |
| Suspension file drawer with oval railing | 68 |

| | |
|---|---|
| Accessories | 70 |
| Application examples | 72 |
| Technical information | 76 |
| Assembly technology | 124 |
| Assembly aids | 128 |

# **DWD XP** DRAWER SYSTEM

This tried-and-tested drawer system offers outstanding quality, maximum design freedom and innovative functional solutions.

| | Product description | | Page |
|---|---|---|---|
| 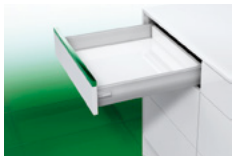 | **Drawer H95**<br>• The practical standard drawer for all applications<br>• Integrated side and height adjustment including locking screw<br>• Strong front holder | 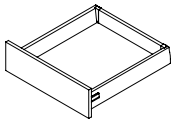 | 16 |
| 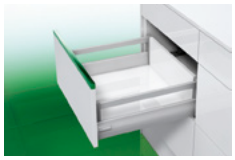 | **Pot drawer H95 with rectangular railing**<br>• Tilt angle adjustment using railing holder<br>• Integrated side and height adjustment including locking screw<br>• Strong front holder | 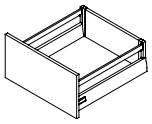 | 18 |
| 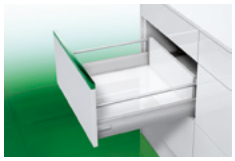 | **Pot drawer H95 with round railing**<br>• Tool-free tilt angle adjustment using round railing<br>• Integrated side and height adjustment including locking screw<br>• Variowing or Duowing can be retrofitted | 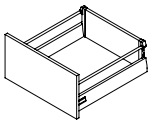 | 22 |
| 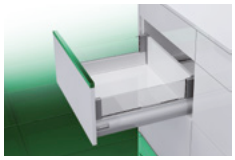 | **Pot drawer H95 with with TOP add-on**<br>• Elegant add-on system<br>• Individual designs can be achieved by using a range of materials<br>• Integrated tilt angle adjustment | 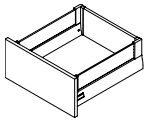 | 32 |
| | **F8 inset drawer H95**<br>• Colour-coordinated aluminium front panel profile<br>• High-quality design with smooth inside and outside surfaces<br>• Dimensions identical to those of standard drawer | 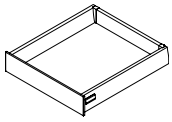 | 34 |
| | **F8 inset drawer H95 with rectangular railing**<br>• Colour-coordinated aluminium front panel profile<br>• High-quality design with smooth inside and outside surfaces<br>• Dimensions identical to those of standard drawer | 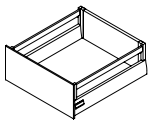 | 36 |
| | **F8 inset drawer H95 with round railing**<br>• Colour-coordinated aluminium front panel profile<br>• High-quality design with smooth inside and outside surfaces<br>• Dimensions identical to those of standard drawer | 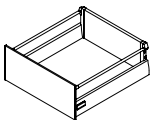 | 38 |
| | **F8 inset drawer H95 with TOP add-on**<br>• Colour-coordinated aluminium front panel profile<br>• High-quality design with smooth inside and outside surfaces<br>• Dimensions identical to those of standard drawer | 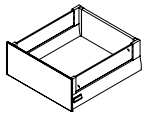 | 40 |
| | **Inset drawer H95**<br>• Colour-coordinated aluminium front panel profile for cutting to length<br>• Easy to fit | 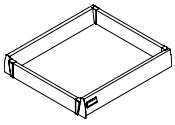 | 42 |

| | Product description | | Page |
|---|---|---|---|
| | **Inset drawer H95 with rectangular railing**<br>• Colour-coordinated aluminium front panel profile for cutting to length<br>• Easy to fit | 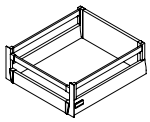 | 44 |
| | **Inset drawer H95 with round railing**<br>• Colour-coordinated aluminium front panel profile for cutting to length<br>• Easy to fit | 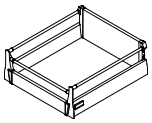 | 46 |
| 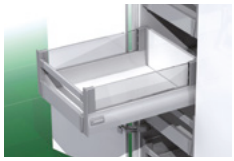 | **Inset drawer H95 with rectangular railing and TOP add-on**<br>• Elegant add-on system<br>• Colour-coordinated aluminium front panel profile for cutting to length<br>• Easy to fit | 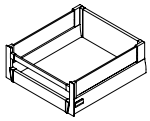 | 48 |
| 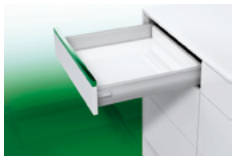 | **DWD XP full extension slide 40 kg Soft-close**<br>• Fully synchronised slide technology without mid-way knock<br>• Integrated Soft-close technology<br>• Excellent running characteristics<br>• Maximum lateral stability | 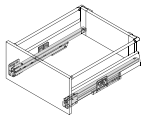 | 50 |
| 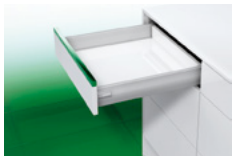 | **DWD XP full extension slide 60 kg Soft-close**<br>• Fully synchronised slide technology without mid-way knock<br>• Integrated Soft-close technology<br>• Excellent running characteristics<br>• Maximum lateral stability | 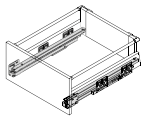 | 52 |
| | **DWD XP full extension slide 40 kg Tipmatic**<br>• Mechanical opening system for handle-free fronts<br>• Tipmatic ejector unit integrated into the slide<br>• Excellent running characteristics<br>• Fully synchronised slide technology | 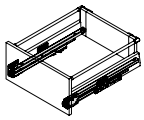 | 54 |
| 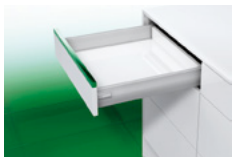 | **DWD XP full extension slide 60 kg Tipmatic**<br>• Mechanical opening system for handle-free fronts<br>• Tipmatic ejector unit integrated into the slide<br>• Excellent running characteristics<br>• Fully synchronised slide technology | 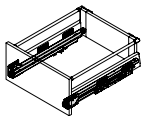 | 56 |
| 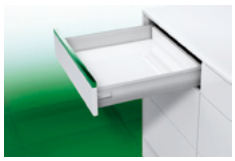 | **Drawer H95 – flat pack**<br>• All GRASS components for one drawer in one package<br>• All parts clearly arranged and immediately at hand<br>• The small volume of the package saves storage space | 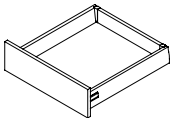 | 58 |
| 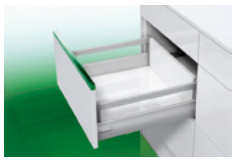 | **Pot drawer H95 with rectangular railing – flat pack**<br>• All GRASS components for one pot drawer with rectangular railing in one package<br>• All parts clearly arranged and immediately at hand<br>• The small volume of the package saves storage space | 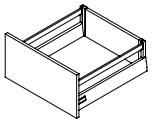 | 60 |

# **DWD XP** DRAWER SYSTEM

This tried-and-tested drawer system offers outstanding quality, maximum design freedom and innovative functional solutions.

| | Product description | | Page |
|---|---|---|---|
| 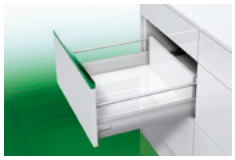 | **Pot drawer H95 with round railing – flat pack**<br>• All GRASS components for one pot drawer with round railing in one package<br>• All parts clearly arranged and immediately at hand<br>• The small volume of the package saves storage space | 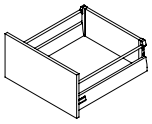 | 62 |
| | **Variowing**<br>• Elegant add-on system for round railing<br>• Individual designs can be achieved by using a range of materials<br>• Easy installation without tools | 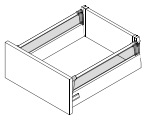 | 64 |
| | **Duowing**<br>• High-quality, double-wall add-on system for round railing<br>• Optimally matched to drawer side design<br>• Easy installation without tools | 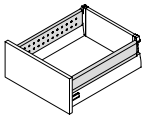 | 66 |
| 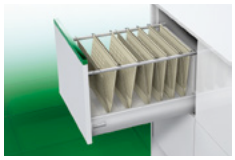 | **Suspension file drawer with oval railing**<br>• Secure screw connection at front and back panels ensures stable construction and high load capacity<br>• Oval, natural anodised aluminium tube with high bending resistance<br>• Tool-free tilt angle adjustment using the oval railing | 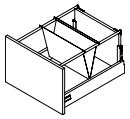 | 68 |
| | **DWD XP accessories**<br>• Front-bottom connector<br>• DWD XP spacer<br>• DWD XP child lock<br>• DWD XP locking pin<br>• Screws | | 70 |
| | **Application example, crockery pull-out cabinet** | | 72 |
| | **Application example, pull-out larder** | | 73 |
| | **Application example, oven base drawer** | | 74 |
| | **Spacer plate for oven base drawer**<br>• Spacer plate, 2 mm thick, to make up the difference between the S16 mm and S18 mm cabinet thickness<br>• For DWD XP full extension slides, 40 kg capacity | | 75 |

# DWD XP

## Drawer H95

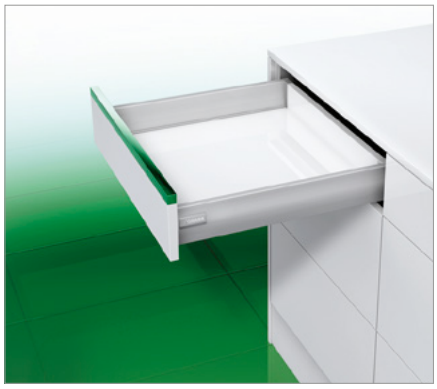

- The practical standard drawer for all applications
- Integrated side and height adjustment including locking screw
- Strong front holder
- Safety lock and transport protection
- Bottom panel machining not required
- Identical width of bottom and back panels

**Packaging unit (PU):**
116 = 40 units in PE
211 = 20 units in a cardboard box
233 = 200 units in a cardboard box
239 = 400 units in a cardboard box
523 = 100 units in PE in a cardboard box

## ORDER INFORMATION

**1 DWD XP drawer sides H95 incl. cover caps**
**Set: One left, one right**

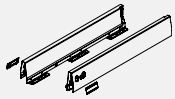

| NL | Aluminium metallic | | | | White | | | | Stone | | | | | | | |
|---|---|---|---|---|---|---|---|---|---|---|---|---|---|---|---|---|
| | Art.-no. | PU | | | Art.-no. | PU | | | Art.-no. | PU | | | | | | |
| 275 | F090075281 | 211 | | | F090075282 | 211 | | | F090136211 | 211 | | | | | | |
| 300 | F090077343 | 211 | | | F090077344 | 211 | | | F090136214 | 211 | | | | | | |
| 350 | F090075285 | 211 | | | F090075286 | 211 | | | F090136217 | 211 | | | | | | |
| 400 | F090075289 | 211 | | | F090075290 | 211 | | | F090136220 | 211 | | | | | | |
| 450 | F090075293 | 211 | | | F090075294 | 211 | | | F090136223 | 211 | | | | | | |
| 500 | F090075297 | 211 | | | F090075298 | 211 | | | F090136226 | 211 | | | | | | |
| 550 | F090075301 | 211 | | | F090075302 | 211 | | | F090136229 | 211 | | | | | | |
| 600 | F090075305 | 211 | | | F090077345 | 211 | | | F090136232 | 211 | | | | | | |
| 650 | F090075308 | 211 | | | F090077346 | 211 | | | F090136235 | 211 | | | | | | |

**2 Clip H86 for wooden back panel**
**Set: One left, one right**

| | Aluminium metallic | | | | White | | | | Stone | | | | | | | |
|---|---|---|---|---|---|---|---|---|---|---|---|---|---|---|---|---|
| | Art.-no. | PU | | | Art.-no. | PU | | | Art.-no. | PU | | | | | | |
| | F092082925 | 523 | 233 | | F092082928 | 523 | 233 | | F092136282 | 523 | 233 | | | | | |

**3 Front holder**
**Single item: Can be used on left/right**

| Description | Art.-no. | PU | | |
|---|---|---|---|---|
| Expansion dowel | F092083119 | | 239 | |
| For press fitting | F092083117 | 116 | | |
| For screw fixing | F092083116 | 116 | 239 | |

## PAGE REFERENCES


| | | | | | |
|---|---|---|---|---|---|
| Slides | 50 | Application examples | 72 | Organising systems | 103 |
| Flat packs | 58 | Technical information | 76 | Assembly technology | 124 |
| Accessories | 70 | Sensomatic | 81 | Assembly aids | 128 |

## INSTALLATION INFORMATION

All dimensions in millimetres

### Installation dimensions

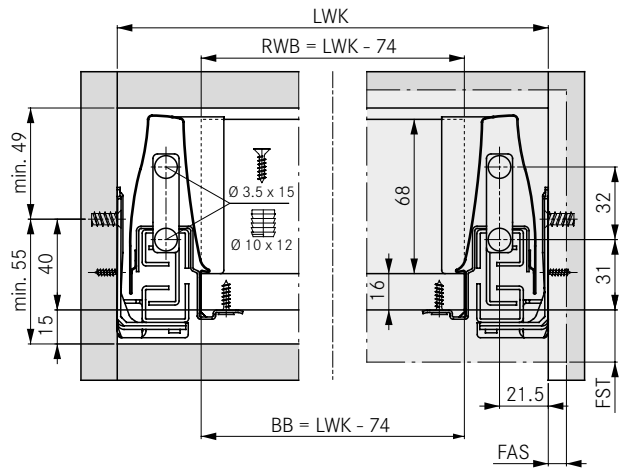


### Cutting dimensions for 16 mm chipboard

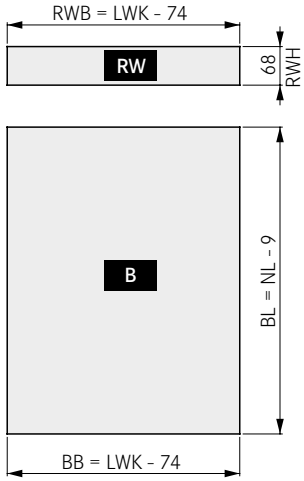


### Exploded view drawing

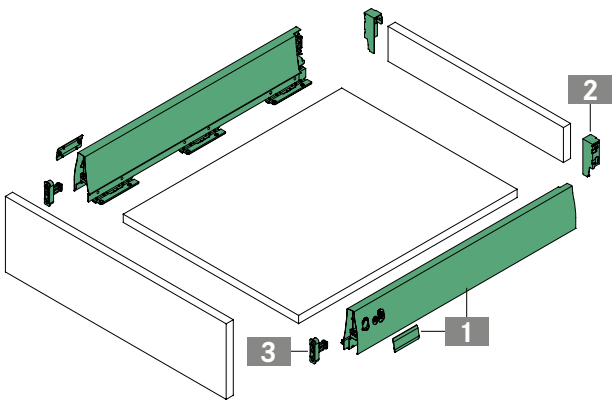


### Fixing positions for full extension slide

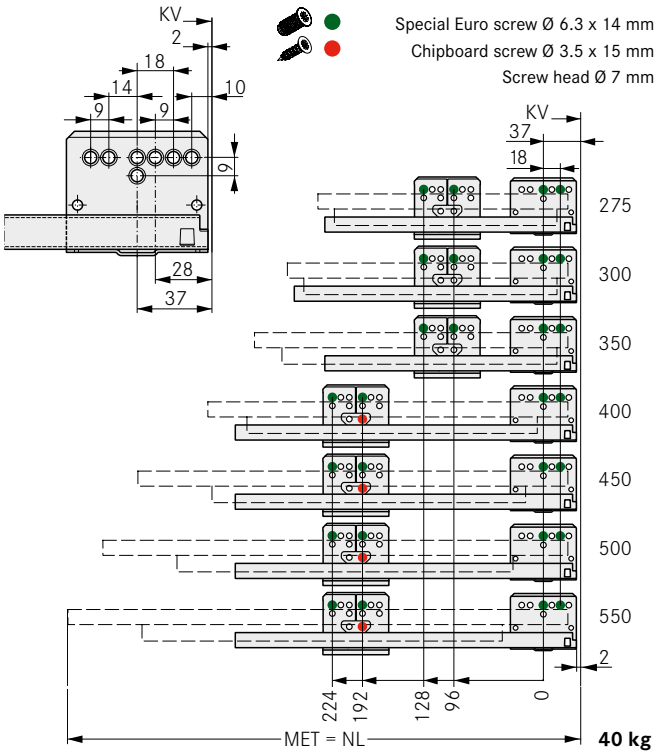


**Note:** Full extension slide, 60 kg, see Slides section (from page 52)

## LEGEND

| | | | | | |
|---|---|---|---|---|---|
| B | Bottom panel | FST | Front overlay | NL | Nominal length |
| BB | Bottom panel width | KV | Front edge of cabinet | RW | Back panel |
| BL | Bottom panel length | LWK | Inside cabinet width | RWB | Width of back panel |
| FAS | Front overlay, side | MET | Minimum installation depth | RWH | Height of back panel |

# DWD XP

## Pot drawer H95 with rectangular railing

- Integrated side and height adjustment including locking screw
- Tilt angle adjustment using railing holder
- Strong front holder
- Safety lock and transport protection
- Bottom panel machining not required
- Identical width of bottom and back panels

**Packaging unit (PU):**
116 = 40 units in PE
211 = 20 units in a cardboard box
223 = 100 units in a cardboard box
233 = 200 units in a cardboard box
239 = 400 units in a cardboard box
507 = 10 units in PE in a cardboard box
523 = 100 units in PE in a cardboard box

## ORDER INFORMATION

**1 DWD XP drawer sides H95 incl. cover caps**
**Set: One left, one right**

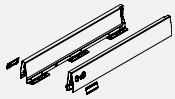

| NL | Aluminium metallic | | | | White | | | | Stone | | | | | | | |
|---|---|---|---|---|---|---|---|---|---|---|---|---|---|---|---|---|
| | Art.-no. | PU | | | Art.-no. | PU | | | Art.-no. | PU | | | | | | |
| 400 | F090075289 | 211 | | | F090075290 | 211 | | | F090136220 | 211 | | | | | | |
| 450 | F090075293 | 211 | | | F090075294 | 211 | | | F090136223 | 211 | | | | | | |
| 500 | F090075297 | 211 | | | F090075298 | 211 | | | F090136226 | 211 | | | | | | |
| 550 | F090075301 | 211 | | | F090075302 | 211 | | | F090136229 | 211 | | | | | | |

**2 Rectangular screw-on railing**
**Set: Railing, railing clip (front/back) and cover cap, one left, one right**

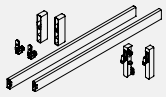

| NL | Aluminium metallic | | | | White | | | | Stone | | | | | | | |
|---|---|---|---|---|---|---|---|---|---|---|---|---|---|---|---|---|
| | Art.-no. | PU | | | Art.-no. | PU | | | Art.-no. | PU | | | | | | |
| 400 | F092077409 | 507 | | | F092072183 | 507 | | | F092136335 | 507 | | | | | | |
| 450 | F092077410 | 507 | | | F092072184 | 507 | | | F092136336 | 507 | | | | | | |
| 500 | F092077411 | 507 | | | F092072185 | 507 | | | F092136337 | 507 | | | | | | |
| 550 | F092077412 | 507 | | | F092072186 | 507 | | | F092136338 | 507 | | | | | | |

**3 Clip H182 for wooden back panel**
**Set: One left, one right**

| | Aluminium metallic | | | | White | | | | Stone | | | | | | | |
|---|---|---|---|---|---|---|---|---|---|---|---|---|---|---|---|---|
| | Art.-no. | PU | | | Art.-no. | PU | | | Art.-no. | PU | | | | | | |
| | F092082943 | 223 | 523 | | F092082946 | 223 | 523 | | F092136285 | 523 | 233 | | | | | |

**4 Front holder**
**Single item: Can be used on left/right**

| Description | Art.-no. | PU | | |
|---|---|---|---|---|
| Expansion dowel | F092083119 | | 239 | |
| For press fitting | F092083117 | 116 | | |
| For screw fixing | F092083116 | 116 | 239 | |

## PAGE REFERENCES


| | | | | | |
|---|---|---|---|---|---|
| Slides | 50 | Application examples | 72 | Organising systems | 103 |
| Flat packs | 58 | Technical information | 76 | Assembly technology | 124 |
| Accessories | 70 | Sensomatic | 81 | Assembly aids | 128 |

## INSTALLATION INFORMATION

All dimensions in millimetres

### Installation dimensions

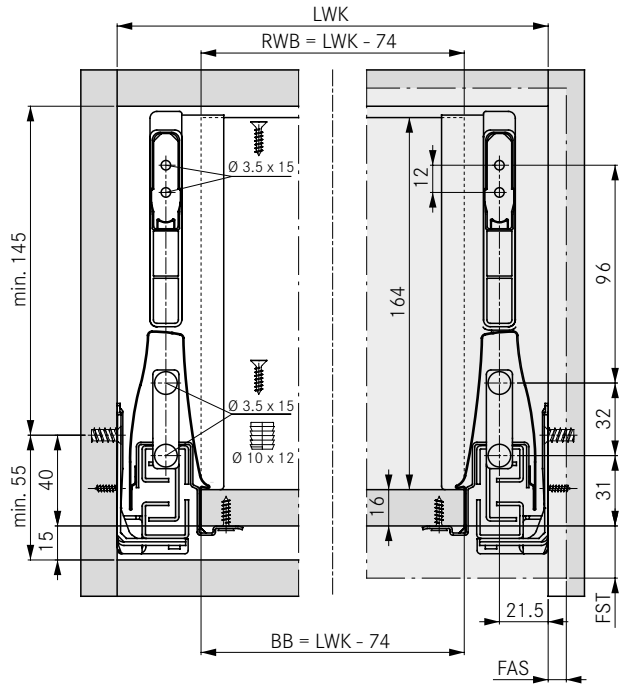


### Cutting dimensions for 16 mm chipboard

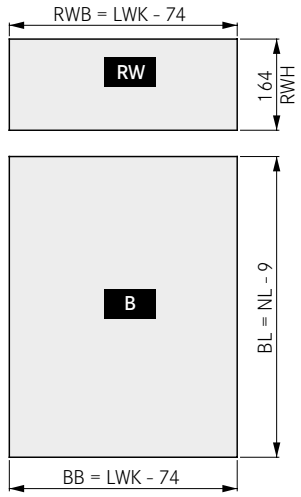


### Front tilt angle adjustment

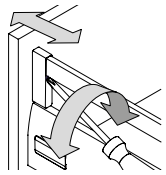

### Exploded view drawing

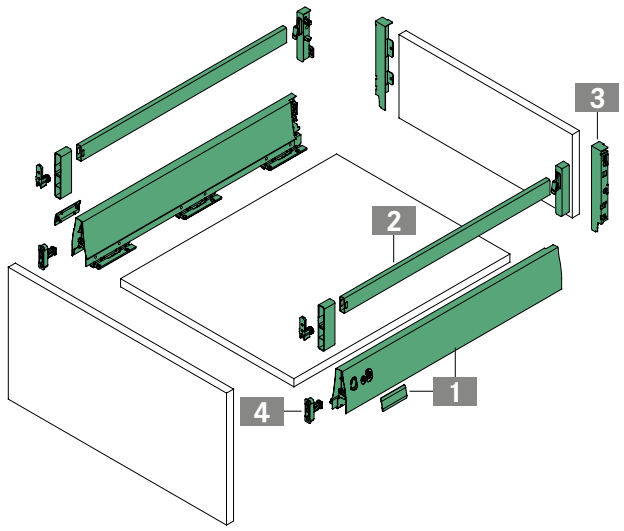


### Fixing positions for full extension slide

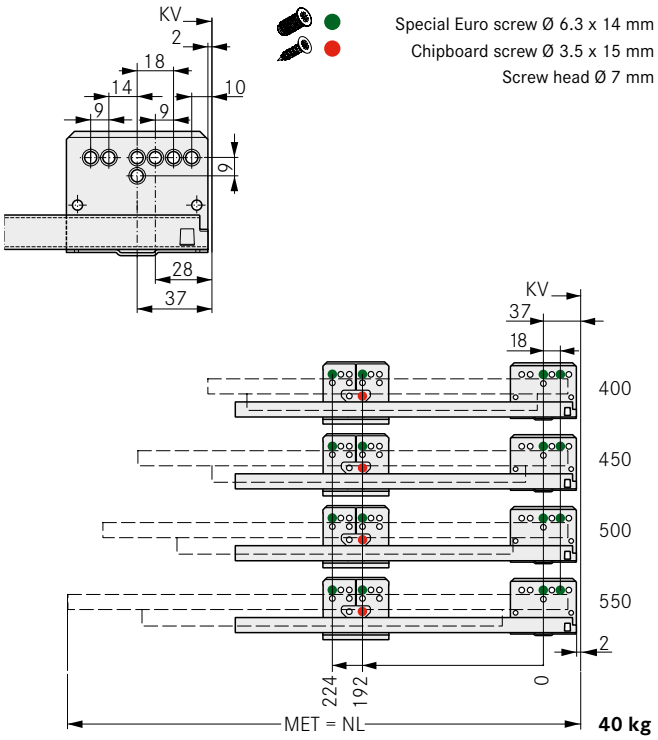


**Note:** Full extension slide, 60 kg, see Slides section (from page 52)

## LEGEND

| | | | | | |
|---|---|---|---|---|---|
| B | Bottom panel | FST | Front overlay | NL | Nominal length |
| BB | Bottom panel width | KV | Front edge of cabinet | RW | Back panel |
| BL | Bottom panel length | LWK | Inside cabinet width | RWB | Width of back panel |
| FAS | Front overlay, side | MET | Minimum installation depth | RWH | Height of back panel |

# DWD XP

## Pot drawer H95 with variable back panel height and rectangular railing

**Pot drawer H95 with variable back panel height and rectangular railing**

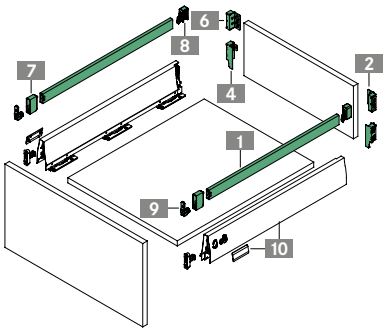


**The following is required:**

2 x 1
1 x 2 / 1 x 4 + 2 x 6
2 x 7
1 x 8
2 x 9
10

**Pot drawer H95 with variable back panel height and double rectangular railing**

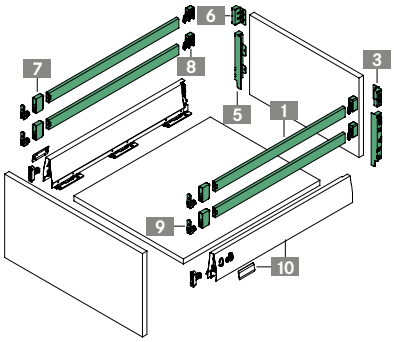


**The following is required:**

4 x 1
1 x 3 / 1 x 5 + 2 x 6
4 x 7
2 x 8
4 x 9
10

## ORDER INFORMATION

**1 Rectangular screw-on railing**
**Single item: Can be used on left/right**

| NL | Aluminium metallic | | | | White | | | | Stone | | | |
|---|---|---|---|---|---|---|---|---|---|---|---|---|
| | Art.-no. | PU | | | Art.-no. | PU | | | Art.-no. | PU | | |
| 275 | F092116280 | 223 | | | F092116534 | 223 | | | F092136431 | 223 | | |
| 300 | F092072234 | 223 | | | F092117186 | 223 | | | F092136432 | 223 | | |
| 350 | F092116281 | 223 | | | F092117187 | 223 | | | F092136433 | 223 | | |
| 400 | F092116282 | 223 | | | F092117188 | 223 | | | F092136434 | 223 | | |
| 450 | F092116283 | 223 | | | F092117189 | 223 | | | F092136435 | 223 | | |
| 500 | F092116284 | 223 | | | F092117190 | 223 | | | F092136436 | 223 | | |
| 550 | F092072235 | 223 | | | F092117191 | 223 | | | F092136437 | 223 | | |
| 600 | F092116535 | 223 | | | F092117192 | 223 | | | F092136438 | 223 | | |
| 650 | F092116537 | 223 | | | F092116536 | 223 | | | F092136439 | 223 | | |

**2 Clip for variable wooden back panel**
**Set: Back panel clip H86 (open) and railing adapter (variable) one left, one right**

| | Aluminium metallic | | | | White | | | | Stone | | | |
|---|---|---|---|---|---|---|---|---|---|---|---|---|
| | Art.-no. | PU | | | Art.-no. | PU | | | Art.-no. | PU | | |
| | F092082988 | 523 | | | F092082989 | 523 | | | F092136288 | 523 | | |

**3 Clip for variable wooden back panel**
**Set: Back panel clip H182 (open) and railing adapter (variable) one left, one right**

| | Aluminium metallic | | | | White | | | | Stone | | | |
|---|---|---|---|---|---|---|---|---|---|---|---|---|
| | Art.-no. | PU | | | Art.-no. | PU | | | Art.-no. | PU | | |
| | F092082992 | 523 | | | F092082993 | 523 | | | F092136289 | 523 | | |

**4 Back panel clip H86 (open) for variable wooden back panel**
**Set: One left, one right**

| | Aluminium metallic | | | | White | | | | Stone | | | |
|---|---|---|---|---|---|---|---|---|---|---|---|---|
| | Art.-no. | PU | | | Art.-no. | PU | | | Art.-no. | PU | | |
| | F092082969 | 223 | | | F092082972 | 223 | | | F092136290 | 233 | | |

## PAGE REFERENCES


| | | | | | |
|---|---|---|---|---|---|
| Slides | 50 | Application examples | 72 | Organising systems | 103 |
| Flat packs | 58 | Technical information | 76 | Assembly technology | 124 |
| Accessories | 70 | Sensomatic | 81 | Assembly aids | 128 |

| | |
|---|---|
| | |

**5** **Back panel clip H182 (open) for variable wooden back panel**
**Set: One left, one right**

| | Aluminium metallic | | | | White | | | | Stone | | | |
|---|---|---|---|---|---|---|---|---|---|---|---|---|
| | Art.-no. | PU | | | Art.-no. | PU | | | Art.-no. | PU | | |
| | **F092082978** | 223 | | | **F092115414** | 223 | | | **F092136293** | 233 | | |

**6** **Railing adapter (variable)**
**Single item: Can be used on left/right**

| | Aluminium metallic | | | | White | | | | Stone | | | |
|---|---|---|---|---|---|---|---|---|---|---|---|---|
| | Art.-no. | PU | | | Art.-no. | PU | | | Art.-no. | PU | | |
| | **F092082997** | 239 | | | **F092076725** | 239 | | | **F092136426** | 239 | | |

**7** **Railing cover cap (front)**
**Single item: Can be used on left/right**

| | Aluminium metallic | | | | White | | | | Stone | | | |
|---|---|---|---|---|---|---|---|---|---|---|---|---|
| | Art.-no. | PU | | | Art.-no. | PU | | | Art.-no. | PU | | |
| | **F145038516** | 123 | | | **F145055341** | 123 | | | **F092136422** | 223 | | |

**8** **Railing clip (back)**
**Set: One left, one right**

| | Aluminium metallic | | | | White | | | | Stone | | | |
|---|---|---|---|---|---|---|---|---|---|---|---|---|
| | Art.-no. | PU | | | Art.-no. | PU | | | Art.-no. | PU | | |
| | **F092100599** | 233 | | | **F092116878** | 233 | | | **F092136423** | 233 | | |

**9** **Railing clip (front) with tilt angle adjustment, screw-on**
**Single item: Can be used on left/right**

| Description | Art.-no. | PU | |
|---|---|---|---|
| For screw fixing | **F092082551** | 223 | 239 |

**10** **DWD XP drawer sides H95 and front holder see page 16**

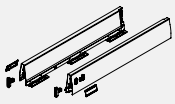

## LEGEND

| | |
|---|---|
| NL | Nominal length |

# DWD XP

## Pot drawer H95 with round railing

- Integrated side and eccentric height adjustment including locking screw
- Tool-free tilt angle adjustment using round railing
- Strong front holder
- Safety lock and transport protection
- Bottom panel machining not required
- Identical width of bottom and back panels
- Variowing or Duowing can be retrofitted

**Packaging unit (PU):**
116 = 40 units in PE
211 = 20 units in a cardboard box
223 = 100 units in a cardboard box
233 = 200 units in a cardboard box
239 = 400 units in a cardboard box
513 = 25 units in PE in a cardboard box
523 = 100 units in PE in a cardboard box

## ORDER INFORMATION

### 1 DWD XP drawer sides H95 incl. cover caps
**Set: One left, one right**

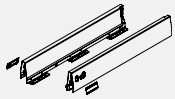

| NL | Aluminium metallic | | | | White | | | | Stone | | | |
|---|---|---|---|---|---|---|---|---|---|---|---|---|
| | Art.-no. | PU | | | Art.-no. | PU | | | Art.-no. | PU | | |
| 350 | F090075285 | 211 | | | F090075286 | 211 | | | F090136217 | 211 | | |
| 400 | F090075289 | 211 | | | F090075290 | 211 | | | F090136220 | 211 | | |
| 450 | F090075293 | 211 | | | F090075294 | 211 | | | F090136223 | 211 | | |
| 500 | F090075297 | 211 | | | F090075298 | 211 | | | F090136226 | 211 | | |
| 550 | F090075301 | 211 | | | F090075302 | 211 | | | F090136229 | 211 | | |
| 600 | F090075305 | 211 | | | F090077345 | 211 | | | F090136232 | 211 | | |
| 650 | F090075308 | 211 | | | F090077346 | 211 | | | F090136235 | 211 | | |

### 2 Round screw-on railing
**Set: Railing, railing clip (front/back) and cover cap, one left, one right**

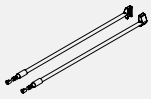

| NL | Aluminium metallic | | | | White | | | | Stone | | | |
|---|---|---|---|---|---|---|---|---|---|---|---|---|
| | Art.-no. | PU | | | Art.-no. | PU | | | Art.-no. | PU | | |
| 350 | F092075875 | 513 | 223 | | F092075876 | 513 | 223 | | F092136298 | 513 | | |
| 400 | F092075878 | 513 | 223 | | F092075879 | 513 | 223 | | F092136299 | 513 | | |
| 450 | F092075881 | 513 | 223 | | F092075882 | 513 | 223 | | F092136300 | 513 | | |
| 500 | F092075884 | 513 | 223 | | F092075885 | 513 | 223 | | F092136301 | 513 | | |
| 550 | F092075887 | 513 | | | F092075888 | 513 | | | F092136302 | 513 | | |
| 600 | F092075890 | 513 | | | F092071890 | 513 | | | F092136303 | 513 | | |
| 650 | F092075892 | 513 | | | F092077401 | 513 | | | F092136304 | 513 | | |

### 3 Clip H182 for wooden back panel
**Set: One left, one right**

| | Aluminium metallic | | | | White | | | | Stone | | | |
|---|---|---|---|---|---|---|---|---|---|---|---|---|
| | Art.-no. | PU | | | Art.-no. | PU | | | Art.-no. | PU | | |
| | F092082943 | 223 | 523 | | F092082946 | 223 | 523 | | F092136285 | 523 | 233 | |

### 4 Front holder
**Single item: Can be used on left/right**

| Description | Art.-no. | PU | | |
|---|---|---|---|---|
| Expansion dowel | F092083119 | | 239 | |
| For press fitting | F092083117 | 116 | | |
| For screw fixing | F092083116 | 116 | 239 | |

## PAGE REFERENCES


| | | | | | |
|---|---|---|---|---|---|
| Slides | 50 | Accessories | 70 | Sensomatic | 81 |
| Flat packs | 58 | Application examples | 72 | Organising systems | 103 |
| Add-on systems | 64 | Technical information | 76 | Assembly technology | 124 |

## INSTALLATION INFORMATION

All dimensions in millimetres

Installation dimensions

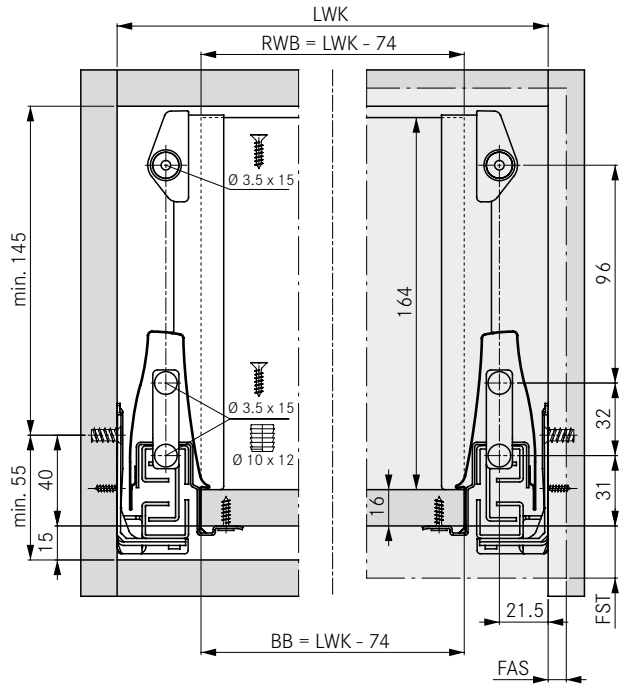


Cutting dimensions for 16 mm chipboard

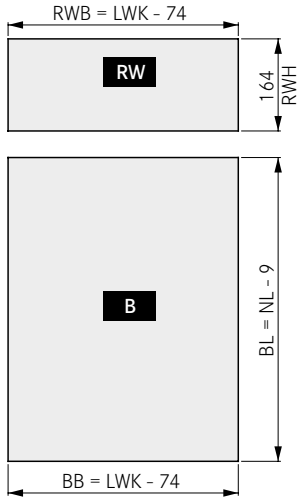


Front tilt angle adjustment

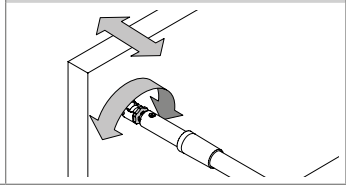

Screw-on installation of railing

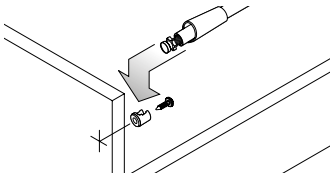

Exploded view drawing

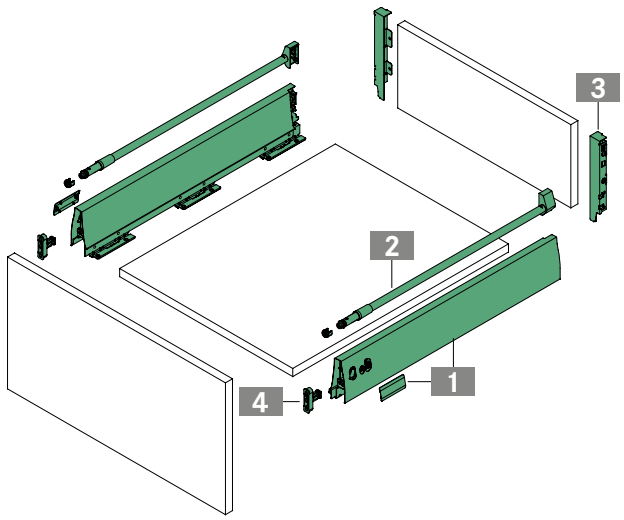


Fixing positions for full extension slide

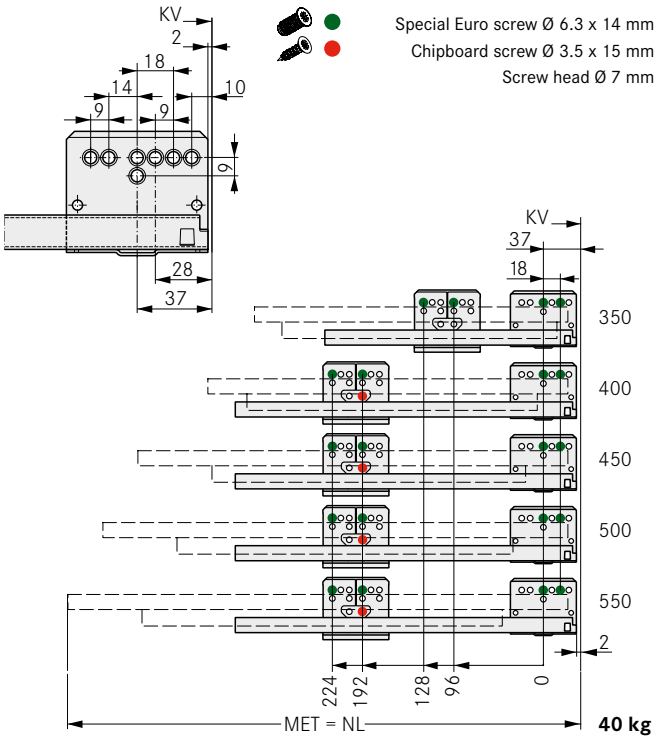


**Note:** Full extension slide, 60 kg, see Slides section (from page 52)

## LEGEND

| | | | | | |
|---|---|---|---|---|---|
| B | Bottom panel | FST | Front overlay | NL | Nominal length |
| BB | Bottom panel width | KV | Front edge of cabinet | RW | Back panel |
| BL | Bottom panel length | LWK | Inside cabinet width | RWB | Width of back panel |
| FAS | Front overlay, side | MET | Minimum installation depth | RWH | Height of back panel |

# DWD XP

## Pot drawer H95 with variable back panel height and round railing

**Pot drawer H95 with variable back panel height and round railing**

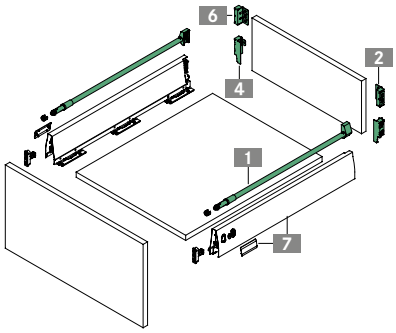


**The following is required:**

1 x 1
1 x 2 / 1 x 4 + 2 x 6
7

**Pot drawer H95 with variable back panel height and double round railing**

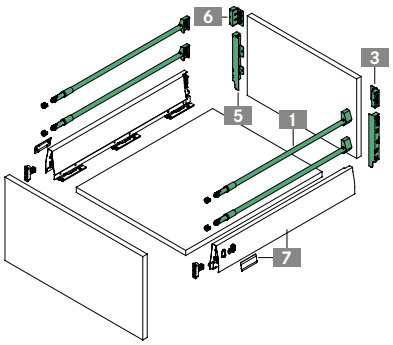


**The following is required:**

2 x 1
1 x 3 / 1 x 5 + 2 x 6
7

## ORDER INFORMATION

### 1 Round screw-on railing

**Set: Railing, railing clip (front/back) and cover cap, one left, one right**

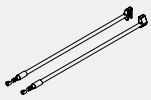

| NL | Aluminium metallic | | | | White | | | | Stone | | | |
|---|---|---|---|---|---|---|---|---|---|---|---|---|
| | Art.-no. | PU | | | Art.-no. | PU | | | Art.-no. | PU | | |
| 350 | F092075875 | 513 | 223 | | F092075876 | 513 | 223 | | F092136298 | 513 | | |
| 400 | F092075878 | 513 | 223 | | F092075879 | 513 | 223 | | F092136299 | 513 | | |
| 450 | F092075881 | 513 | 223 | | F092075882 | 513 | 223 | | F092136300 | 513 | | |
| 500 | F092075884 | 513 | 223 | | F092075885 | 513 | 223 | | F092136301 | 513 | | |
| 550 | F092075887 | 513 | | | F092075888 | 513 | | | F092136302 | 513 | | |
| 600 | F092075890 | 513 | | | F092071890 | 513 | | | F092136303 | 513 | | |
| 650 | F092075892 | 513 | | | F092077401 | 513 | | | F092136304 | 513 | | |

### 2 Clip for variable wooden back panel

**Set: Back panel clip H86 (open) and railing adapter (variable) one left, one right**

| | Aluminium metallic | | | | White | | | | Stone | | | |
|---|---|---|---|---|---|---|---|---|---|---|---|---|
| | Art.-no. | PU | | | Art.-no. | PU | | | Art.-no. | PU | | |
| | F092082988 | 523 | | | F092082989 | 523 | | | F092136288 | 523 | | |

### 3 Clip for variable wooden back panel

**Set: Back panel clip H182 (open) and railing adapter (variable) one left, one right**

| | Aluminium metallic | | | | White | | | | Stone | | | |
|---|---|---|---|---|---|---|---|---|---|---|---|---|
| | Art.-no. | PU | | | Art.-no. | PU | | | Art.-no. | PU | | |
| | F092082992 | 523 | | | F092082993 | 523 | | | F092136289 | 523 | | |

### 4 Back panel clip H86 (open) for variable wooden back panel

**Set: One left, one right**

| | Aluminium metallic | | | | White | | | | Stone | | | |
|---|---|---|---|---|---|---|---|---|---|---|---|---|
| | Art.-no. | PU | | | Art.-no. | PU | | | Art.-no. | PU | | |
| | F092082969 | 223 | | | F092082972 | 223 | | | F092136290 | 233 | | |

## PAGE REFERENCES


| | | | | | |
|---|---|---|---|---|---|
| Slides | 50 | Accessories | 70 | Sensomatic | 81 |
| Flat packs | 58 | Application examples | 72 | Organising systems | 103 |
| Add-on systems | 64 | Technical information | 76 | Assembly technology | 124 |

| | |
|---|---|
| | |

**5** **Back panel clip H182 (open) for variable wooden back panel**
**Set: One left, one right**

| | Aluminium metallic | | | | White | | | | Stone | | | | | | | |
|---|---|---|---|---|---|---|---|---|---|---|---|---|---|---|---|---|
| | Art.-no. | PU | | | Art.-no. | PU | | | Art.-no. | PU | | | | | | |
| | **F092082978** | 223 | | | **F092115414** | 223 | | | **F092136293** | 233 | | | | | | |

**6** **Railing adapter (variable)**
**Single item: Can be used on left/right**

| | Aluminium metallic | | | | White | | | | Stone | | | | | | | |
|---|---|---|---|---|---|---|---|---|---|---|---|---|---|---|---|---|
| | Art.-no. | PU | | | Art.-no. | PU | | | Art.-no. | PU | | | | | | |
| | **F092082997** | 239 | | | **F092076725** | 239 | | | **F092136426** | 239 | | | | | | |

**7** **DWD XP drawer sides H95 and front holder see page 16**

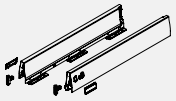

## LEGEND

| | |
|---|---|
| NL | Nominal length |

# DWD XP

## Pot drawer H95 with quick-mounting round railing

- Tool-free railing installation
- Integrated side and eccentric height adjustment including locking screw
- Tool-free tilt angle adjustment using round railing
- Strong front holder
- Safety lock and transport protection
- Bottom panel machining not required
- Identical width of bottom and back panels
- Variowing or Duowing can be retrofitted

**Packaging unit (PU):**
116 = 40 units in PE
211 = 20 units in a cardboard box
223 = 100 units in a cardboard box
233 = 200 units in a cardboard box
239 = 400 units in a cardboard box
523 = 100 units in PE in a cardboard box

## ORDER INFORMATION

**1 DWD XP drawer sides H95 incl. cover caps**
**Set: One left, one right**

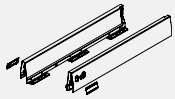

| NL | Aluminium metallic | | White | | Stone | |
|---|---|---|---|---|---|---|
| | Art.-no. | PU | Art.-no. | PU | Art.-no. | PU |
| 350 | F090075285 | 211 | F090075286 | 211 | F090136217 | 211 |
| 400 | F090075289 | 211 | F090075290 | 211 | F090136220 | 211 |
| 450 | F090075293 | 211 | F090075294 | 211 | F090136223 | 211 |
| 500 | F090075297 | 211 | F090075298 | 211 | F090136226 | 211 |
| 550 | F090075301 | 211 | F090075302 | 211 | F090136229 | 211 |
| 600 | F090075305 | 211 | F090077345 | 211 | F090136232 | 211 |
| 650 | F090075308 | 211 | F090077346 | 211 | F090136235 | 211 |

**2 Round railing for quick mounting**
**Set: Railing, railing clip (front/back) and cover cap, one left, one right**

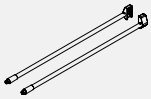

| NL | Aluminium metallic | | White | | Stone | |
|---|---|---|---|---|---|---|
| | Art.-no. | PU | Art.-no. | PU | Art.-no. | PU |
| 350 | F092075962 | 223 | F092072114 | 223 | F092136311 | 223 |
| 400 | F092075974 | 223 | F092075977 | 223 | F092136314 | 223 |
| 450 | F092075989 | 223 | F092075992 | 223 | F092136317 | 223 |
| 500 | F092082405 | 223 | F092082408 | 223 | F092136320 | 223 |
| 550 | F092082420 | 223 | F092082423 | 223 | F092136323 | 223 |
| 600 | F092082429 | 223 | F092076741 | 223 | F092136326 | 223 |
| 650 | F092082435 | 223 | F092135436 | 223 | F092136329 | 223 |

**3 Clip H182 for wooden back panel**
**Set: One left, one right**

| | Aluminium metallic | | | White | | | Stone | | |
|---|---|---|---|---|---|---|---|---|---|
| | Art.-no. | PU | | Art.-no. | PU | | Art.-no. | PU | |
| | F092082943 | 223 | 523 | F092082946 | 223 | 523 | F092136285 | 523 | 233 |

**4 Front holder**
**Single item: Can be used on left/right**

| Description | Art.-no. | PU | |
|---|---|---|---|
| Expansion dowel | F092083119 | | 239 |
| For press fitting | F092083117 | 116 | |
| For screw fixing | F092083116 | 116 | 239 |

## PAGE REFERENCES


| | | | | | |
|---|---|---|---|---|---|
| Slides | 50 | Application examples | 72 | Organising systems | 103 |
| Add-on systems | 64 | Technical information | 76 | Assembly technology | 124 |
| Accessories | 70 | Sensomatic | 81 | Assembly aids | 128 |

## INSTALLATION INFORMATION

All dimensions in millimetres

Installation dimensions

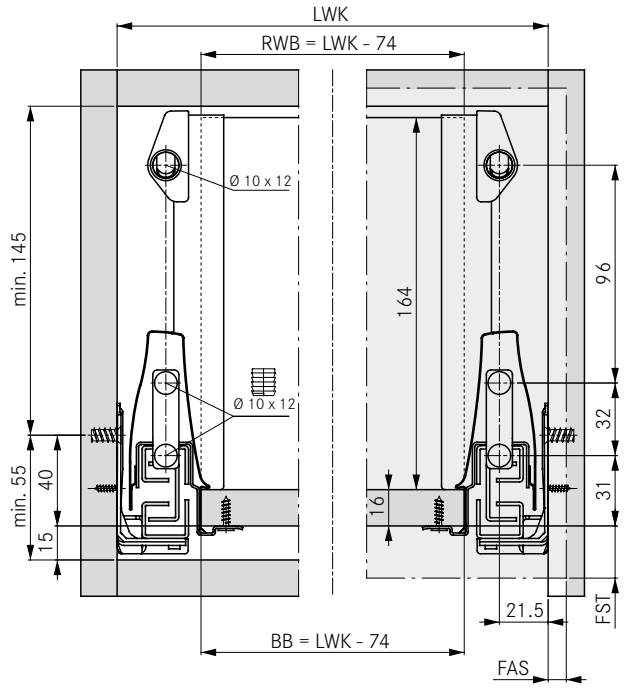


Cutting dimensions for 16 mm chipboard

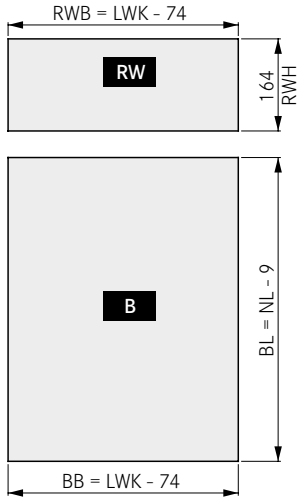


Front tilt angle adjustment

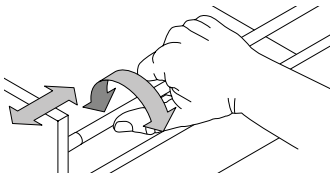

Quick-mounting installation of railing

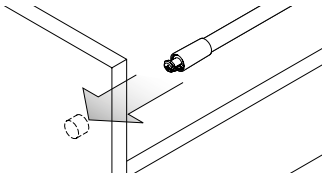

Exploded view drawing

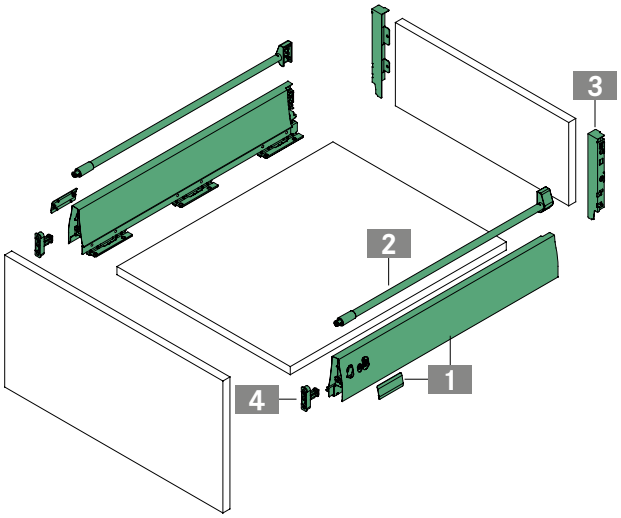


Fixing positions for full extension slide

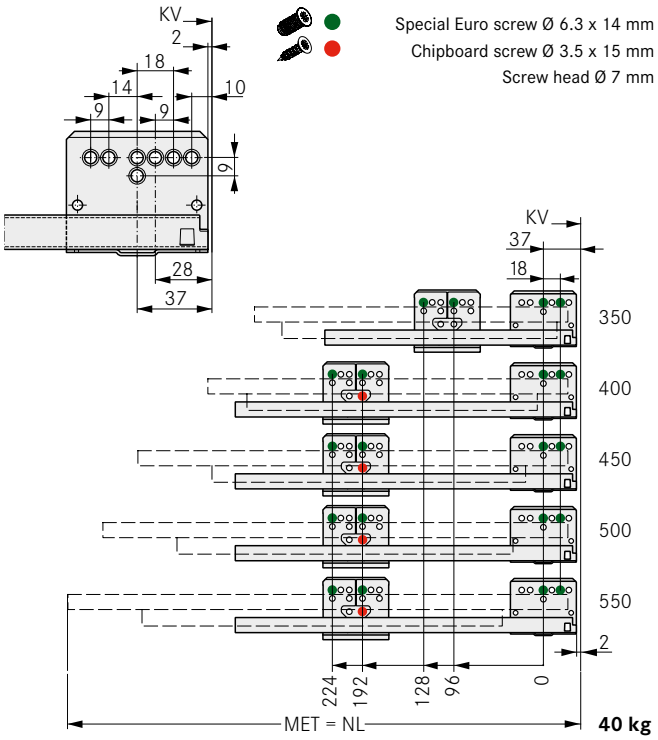


**Note:** Full extension slide, 60 kg, see Slides section (from page 52)

## LEGEND

| | | | | | |
|---|---|---|---|---|---|
| B | Bottom panel | FST | Front overlay | NL | Nominal length |
| BB | Bottom panel width | KV | Front edge of cabinet | RW | Back panel |
| BL | Bottom panel length | LWK | Inside cabinet width | RWB | Width of back panel |
| FAS | Front overlay, side | MET | Minimum installation depth | RWH | Height of back panel |

# DWD XP

## Pot drawer H95 with variable back panel height and round railing

- Choice of back panel height
- Integrated side and eccentric height adjustment including locking screw
- Tool-free tilt angle adjustment using round railing
- Strong front holder
- Safety lock and transport protection
- Bottom panel machining not required
- Identical width of bottom and back panels

**Packaging unit (PU):**
116 = 40 units in PE
211 = 20 units in a cardboard box
223 = 100 units in a cardboard box
239 = 400 units in a cardboard box
513 = 25 units in PE in a cardboard box
523 = 100 units in PE in a cardboard box

## ORDER INFORMATION

**1 DWD XP drawer sides H95 incl. cover caps**
**Set: One left, one right**

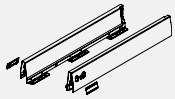

| NL | Aluminium metallic | | | | White | | | | Stone | | | |
|---|---|---|---|---|---|---|---|---|---|---|---|---|
| | Art.-no. | PU | | | Art.-no. | PU | | | Art.-no. | PU | | |
| 350 | F090075285 | 211 | | | F090075286 | 211 | | | F090136217 | 211 | | |
| 400 | F090075289 | 211 | | | F090075290 | 211 | | | F090136220 | 211 | | |
| 450 | F090075293 | 211 | | | F090075294 | 211 | | | F090136223 | 211 | | |
| 500 | F090075297 | 211 | | | F090075298 | 211 | | | F090136226 | 211 | | |
| 550 | F090075301 | 211 | | | F090075302 | 211 | | | F090136229 | 211 | | |
| 600 | F090075305 | 211 | | | F090077345 | 211 | | | F090136232 | 211 | | |
| 650 | F090075308 | 211 | | | F090077346 | 211 | | | F090136235 | 211 | | |

**2 Round screw-on railing**
**Set: Railing, railing clip (front/back) and cover cap, one left, one right**

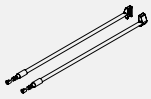

| NL | Aluminium metallic | | | | White | | | | Stone | | | |
|---|---|---|---|---|---|---|---|---|---|---|---|---|
| | Art.-no. | PU | | | Art.-no. | PU | | | Art.-no. | PU | | |
| 350 | F092075875 | 513 | 223 | | F092075876 | 513 | 223 | | F092136298 | 513 | | |
| 400 | F092075878 | 513 | 223 | | F092075879 | 513 | 223 | | F092136299 | 513 | | |
| 450 | F092075881 | 513 | 223 | | F092075882 | 513 | 223 | | F092136300 | 513 | | |
| 500 | F092075884 | 513 | 223 | | F092075885 | 513 | 223 | | F092136301 | 513 | | |
| 550 | F092075887 | 513 | | | F092075888 | 513 | | | F092136302 | 513 | | |
| 600 | F092075890 | 513 | | | F092071890 | 513 | | | F092136303 | 513 | | |
| 650 | F092075892 | 513 | | | F092077401 | 513 | | | F092136304 | 513 | | |

**3 Clip for variable wooden back panel**
**Set: Back panel clip H86 (open) and railing clip (variable), one left, one right**

| | Aluminium metallic | | | | White | | | | Stone | | | |
|---|---|---|---|---|---|---|---|---|---|---|---|---|
| | Art.-no. | PU | | | Art.-no. | PU | | | Art.-no. | PU | | |
| | F092082988 | 523 | | | F092082989 | 523 | | | F092136288 | 523 | | |

**4 Front holder**
**Single item: Can be used on left/right**

| Description | Art.-no. | PU | | |
|---|---|---|---|---|
| Expansion dowel | F092083119 | | 239 | |
| For press fitting | F092083117 | 116 | | |
| For screw fixing | F092083116 | 116 | 239 | |

## PAGE REFERENCES


| | | | | | |
|---|---|---|---|---|---|
| Slides | 50 | Application examples | 72 | Organising systems | 103 |
| Add-on systems | 64 | Technical information | 76 | Assembly technology | 124 |
| Accessories | 70 | Sensomatic | 81 | Assembly aids | 128 |

## INSTALLATION INFORMATION

All dimensions in millimetres

Installation dimensions

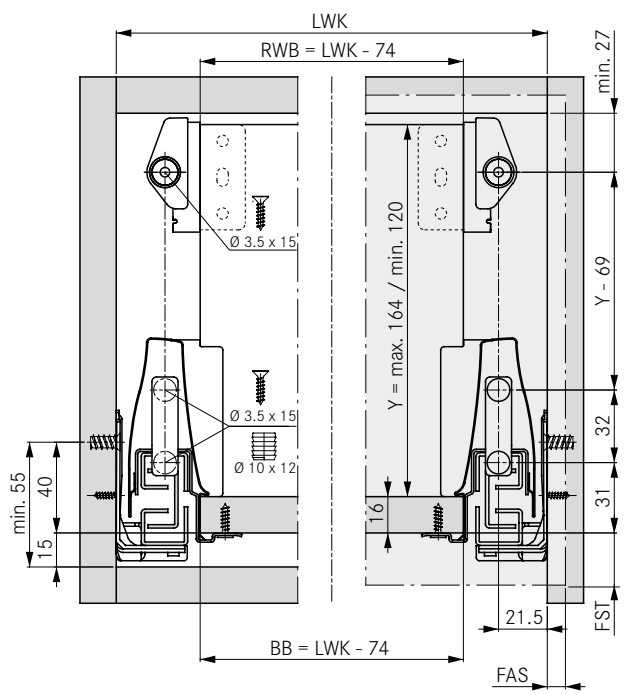


Cutting dimensions for 16 mm chipboard

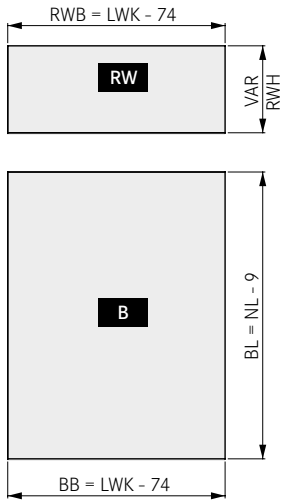


Front tilt angle adjustment

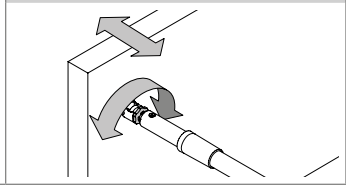

Screw-on installation of railing

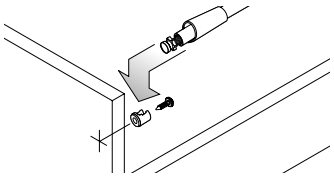

Exploded view drawing

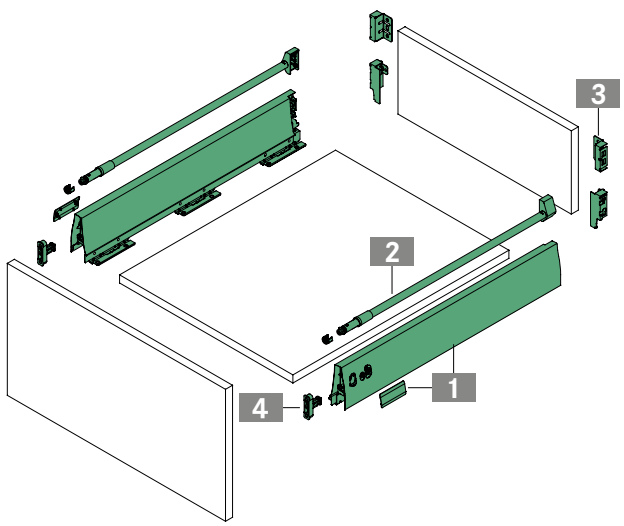


Fixing positions for full extension drawer

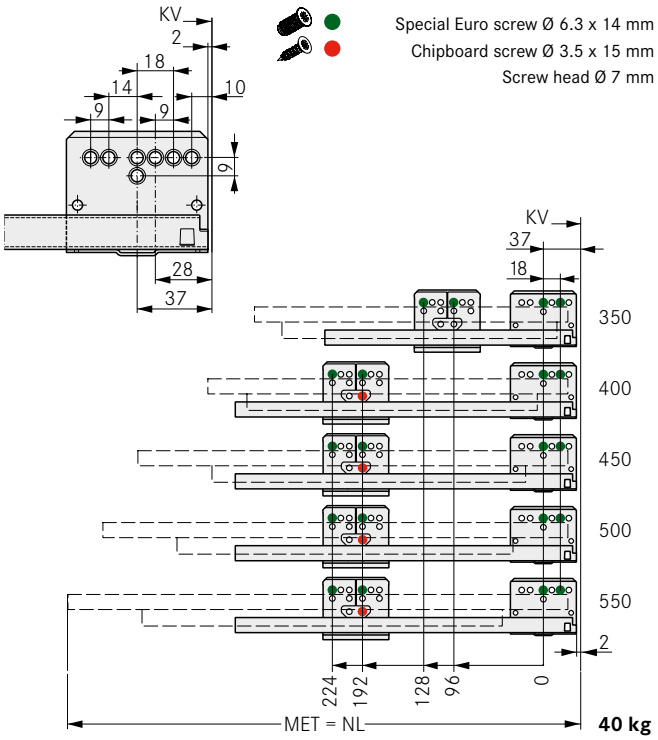


**Note:** Full extension slide, 60 kg, see Slides section (from page 52)

## LEGEND

| | | | | | |
|---|---|---|---|---|---|
| B | Bottom panel | FST | Front overlay | NL | Nominal length |
| BB | Bottom panel width | KV | Front edge of cabinet | RW | Back panel |
| BL | Bottom panel length | LWK | Inside cabinet width | RWB | Width of back panel |
| FAS | Front overlay, side | MET | Minimum installation depth | RWH | Height of back panel |

# DWD XP

## Pot drawer H95 with variable back panel height and double round railing

- Choice of back panel height
- Integrated side and eccentric height adjustment including locking screw
- Tool-free tilt angle adjustment using round railing
- Strong front holder
- Safety lock and transport protection
- Bottom panel machining not required
- Identical width of bottom and back panels

**Packaging unit (PU):**
116 = 40 units in PE
211 = 20 units in a cardboard box
223 = 100 units in a cardboard box
239 = 400 units in a cardboard box
513 = 25 units in PE in a cardboard box
523 = 100 units in PE in a cardboard box

## ORDER INFORMATION

**1 DWD XP drawer sides H95 incl. cover caps**
**Set: One left, one right**

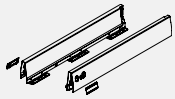

| NL | Aluminium metallic | | | | White | | | | Stone | | | |
|---|---|---|---|---|---|---|---|---|---|---|---|---|
| | Art.-no. | PU | | | Art.-no. | PU | | | Art.-no. | PU | | |
| 350 | F090075285 | 211 | | | F090075286 | 211 | | | F090136217 | 211 | | |
| 400 | F090075289 | 211 | | | F090075290 | 211 | | | F090136220 | 211 | | |
| 450 | F090075293 | 211 | | | F090075294 | 211 | | | F090136223 | 211 | | |
| 500 | F090075297 | 211 | | | F090075298 | 211 | | | F090136226 | 211 | | |
| 550 | F090075301 | 211 | | | F090075302 | 211 | | | F090136229 | 211 | | |
| 600 | F090075305 | 211 | | | F090077345 | 211 | | | F090136232 | 211 | | |
| 650 | F090075308 | 211 | | | F090077346 | 211 | | | F090136235 | 211 | | |

**2 Round screw-on railing**
**Set: Railing, railing clip (front/back) and cover cap, one left, one right**

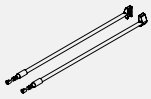

| NL | Aluminium metallic | | | | White | | | | Stone | | | |
|---|---|---|---|---|---|---|---|---|---|---|---|---|
| | Art.-no. | PU | | | Art.-no. | PU | | | Art.-no. | PU | | |
| 350 | F092075875 | 513 | 223 | | F092075876 | 513 | 223 | | F092136298 | 513 | | |
| 400 | F092075878 | 513 | 223 | | F092075879 | 513 | 223 | | F092136299 | 513 | | |
| 450 | F092075881 | 513 | 223 | | F092075882 | 513 | 223 | | F092136300 | 513 | | |
| 500 | F092075884 | 513 | 223 | | F092075885 | 513 | 223 | | F092136301 | 513 | | |
| 550 | F092075887 | 513 | | | F092075888 | 513 | | | F092136302 | 513 | | |
| 600 | F092075890 | 513 | | | F092071890 | 513 | | | F092136303 | 513 | | |
| 650 | F092075892 | 513 | | | F092077401 | 513 | | | F092136304 | 513 | | |

**3 Clip for variable wooden back panel**
**Set: Back panel clip H182 (open) and railing clip (variable), one left, one right**

| | Aluminium metallic | | | | White | | | | Stone | | | |
|---|---|---|---|---|---|---|---|---|---|---|---|---|
| | Art.-no. | PU | | | Art.-no. | PU | | | Art.-no. | PU | | |
| | F092082992 | 523 | | | F092082993 | 523 | | | F092136289 | 523 | | |

**4 Front holder**
**Single item: Can be used on left/right**

| Description | Art.-no. | PU | | |
|---|---|---|---|---|
| Expansion dowel | F092083119 | | 239 | |
| For press fitting | F092083117 | 116 | | |
| For screw fixing | F092083116 | 116 | 239 | |

## PAGE REFERENCES


| | | | | | |
|---|---|---|---|---|---|
| Slides | 50 | Technical information | 76 | Assembly technology | 124 |
| Accessories | 70 | Sensomatic | 81 | Assembly aids | 128 |
| Application examples | 72 | Organising systems | 103 | Packaging code | 131 |

## INSTALLATION INFORMATION

All dimensions in millimetres

Installation dimensions

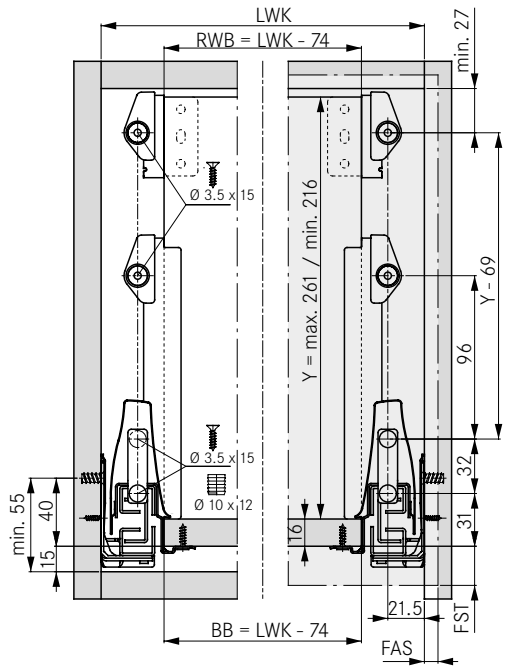


Cutting dimensions for 16 mm chipboard

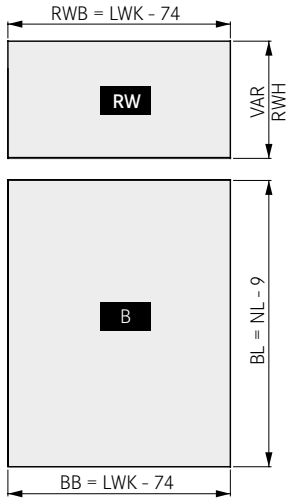


Front tilt angle adjustment

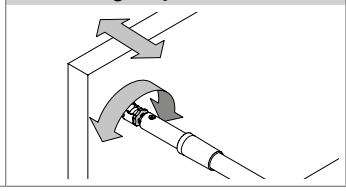

Screw-on installation of railing

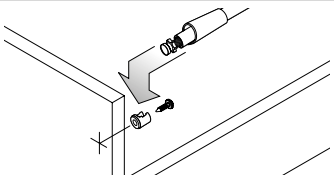

Exploded view drawing

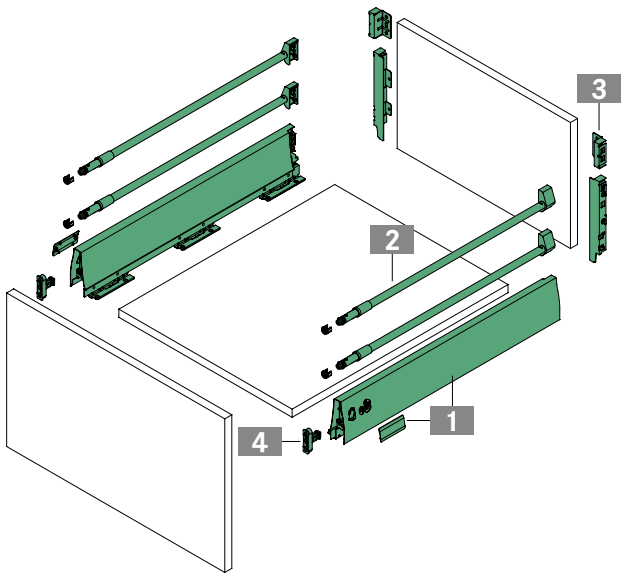


Fixing positions for full extension slide

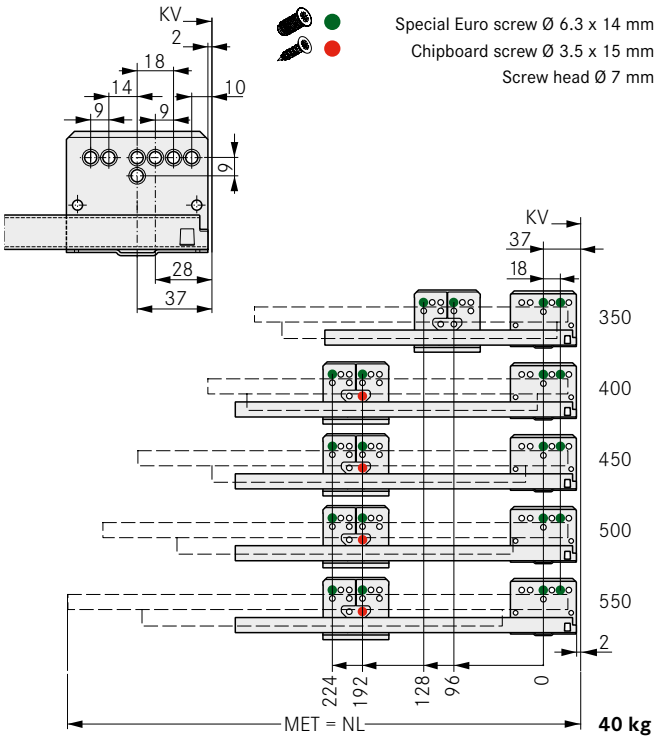


**Note:** Full extension slide, 60 kg, see Slides section (from page 52)

## LEGEND

| | | | | | |
|---|---|---|---|---|---|
| B | Bottom panel | FST | Front overlay | NL | Nominal length |
| BB | Bottom panel width | KV | Front edge of cabinet | RW | Back panel |
| BL | Bottom panel length | LWK | Inside cabinet width | RWB | Width of back panel |
| FAS | Front overlay, side | MET | Minimum installation depth | RWH | Height of back panel |

# DWD XP

## Pot drawer H95 with TOP add-on

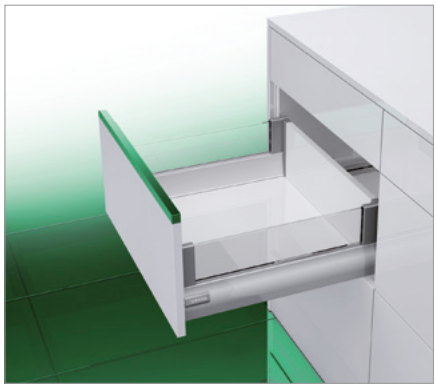

- Elegant add-on system
- Individual design by using different materials as inserts, such as glass or plastic
- Suitable for 8 mm slide-in elements
- Tilt angle adjustment integrated in drawer side
- Integrated side and eccentric height adjustment including locking screw
- Strong front holder
- Safety lock and transport protection

**Packaging unit (PU):**
116 = 40 units in PE
211 = 20 units in a cardboard box
223 = 100 units in a cardboard box
233 = 200 units in a cardboard box
239 = 400 units in a cardboard box
513 = 25 units in PE in a cardboard box
523 = 100 units in PE in a cardboard box

## ORDER INFORMATION

### 1 DWD XP drawer sides H95 without cover caps, with integrated tilt angle adjustment
**Set: One left, one right**

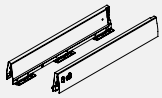

| NL | Aluminium metallic | | | | White | | | | Stone | | | |
|---|---|---|---|---|---|---|---|---|---|---|---|---|
| | Art.-no. | PU | | | Art.-no. | PU | | | Art.-no. | PU | | |
| 275 | F090116723 | 211 | | | F090116750 | 211 | | | F090136238 | 211 | | |
| 300 | F090116726 | 211 | | | F090116753 | 211 | | | F090136241 | 211 | | |
| 350 | F090116729 | 211 | | | F090116756 | 211 | | | F090136244 | 211 | | |
| 400 | F090116732 | 211 | | | F090116759 | 211 | | | F090136247 | 211 | | |
| 450 | F090116735 | 211 | | | F090116762 | 211 | | | F090136250 | 211 | | |
| 500 | F090116738 | 211 | | | F090116765 | 211 | | | F090136253 | 211 | | |
| 550 | F090116741 | 211 | | | F090116768 | 211 | | | F090136256 | 211 | | |
| 600 | F090116744 | 211 | | | F090116771 | 211 | | | F090136259 | 211 | | |
| 650 | F090116747 | 211 | | | F090116774 | 211 | | | F090136262 | 211 | | |

### 2 TOP add-on
**Set: Glass clip (front/back), one left, one right**

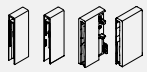

| | Aluminium metallic | | | | White | | | | Stone | | | |
|---|---|---|---|---|---|---|---|---|---|---|---|---|
| | Art.-no. | PU | | | Art.-no. | PU | | | Art.-no. | PU | | |
| | F092116696 | 223 | | | F092116698 | 223 | | | F092136357 | 513 | | |

### 3 Clip H182 for wooden back panel
**Set: One left, one right**

| | Aluminium metallic | | | | White | | | | Stone | | | |
|---|---|---|---|---|---|---|---|---|---|---|---|---|
| | Art.-no. | PU | | | Art.-no. | PU | | | Art.-no. | PU | | |
| | F092082943 | 223 | 523 | | F092082946 | 223 | 523 | | F092136285 | 523 | 233 | |

### 4 Drawer side cover cap
**Single item**

| | Aluminium metallic | | | | White | | | | Stone | | | |
|---|---|---|---|---|---|---|---|---|---|---|---|---|
| | Art.-no. | PU | | | Art.-no. | PU | | | Art.-no. | PU | | |
| | F092083122 | 116 | 239 | | F092083120 | 116 | 239 | | F092136265 | 116 | | |

### 5 Front holder
**Single item: Can be used on left/right**

| Description | Art.-no. | PU | | |
|---|---|---|---|---|
| Expansion dowel | F092083119 | | 239 | |
| For press fitting | F092083117 | 116 | | |
| For screw fixing | F092083116 | 116 | 239 | |

### 6 Add-on clip (front)
**Single item: Can be used on left/right**



| Description | Art.-no. | PU | | |
|---|---|---|---|---|
| For press fitting | F092072256 | | 239 | |
| For screw fixing | F092072255 | 223 | 239 | |


| | |
|---|---|
| Slides | 50 |
| Accessories | 70 |
| Application examples | 72 |
| Technical information | 76 |
| Sensomatic | 81 |
| Organising systems | 103 |

## INSTALLATION INFORMATION

All dimensions in millimetres

Installation dimensions

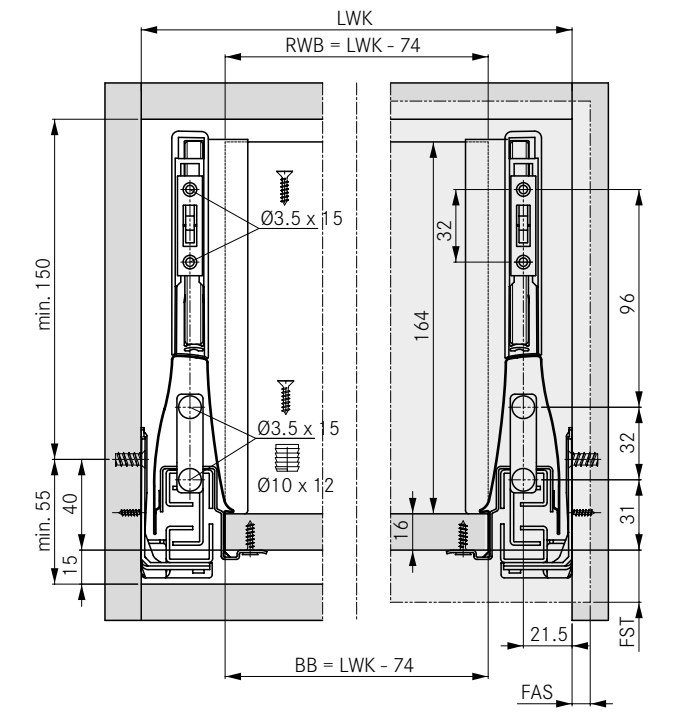


Cutting dimensions for 16 mm chipboard

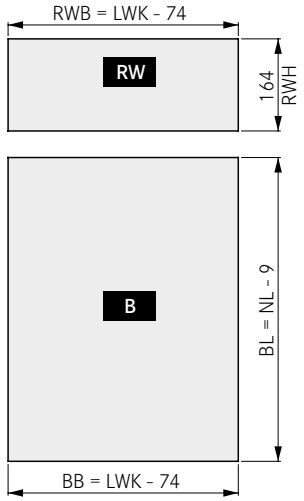


Glass cutting dim.

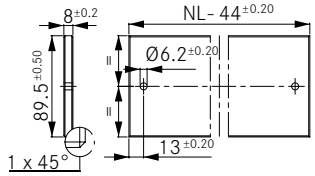


Exploded view drawing

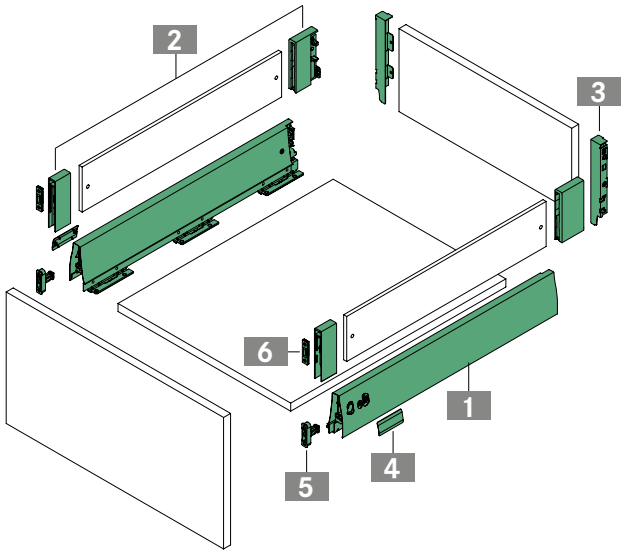


Fixing positions for full extension slide

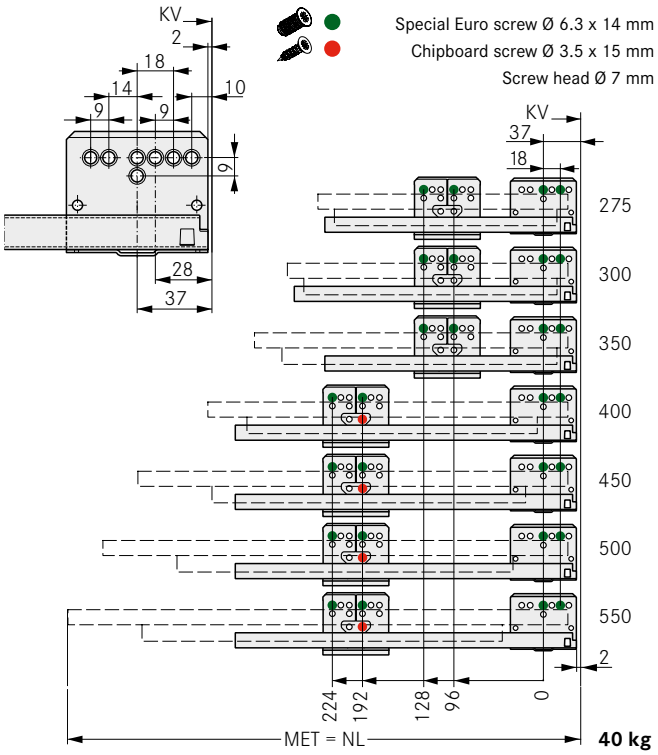


**Note:** Full extension slide, 60 kg, see Slides section (from page 52)

## LEGEND

| | | | | | |
|---|---|---|---|---|---|
| B | Bottom panel | FST | Front overlay | NL | Nominal length |
| BB | Bottom panel width | KV | Front edge of cabinet | RW | Back panel |
| BL | Bottom panel length | LWK | Inside cabinet width | RWB | Width of back panel |
| FAS | Front overlay, side | MET | Minimum installation depth | RWH | Height of back panel |

# DWD XP

## F8 inset drawer H95

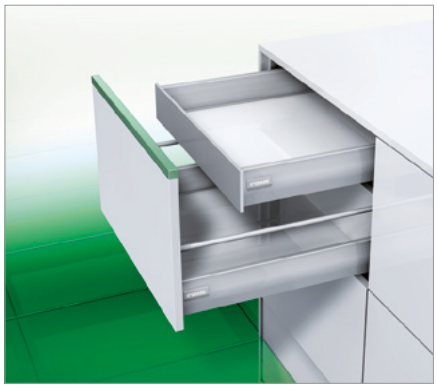

- Colour-coordinated aluminium front panel profile for cutting to length
- High-quality design with smooth inside and outside surfaces
- Identical dimensions as those of standard drawer (internal depth)

**Packaging unit (PU):**
211 = 20 units in a cardboard box
218 = 60 units in a cardboard box
223 = 100 units in a cardboard box
511 = 20 units in PE in a cardboard box

## ORDER INFORMATION

**1 F8 inset panel for inset drawer H95**
**Single item: For cutting to length**

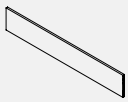

| L | Aluminium metallic | | | White | | | Stone | | |
|---|---|---|---|---|---|---|---|---|---|
| | Art.-no. | PU | | Art.-no. | PU | | Art.-no. | PU | |
| 1160 | **F092101372** | 211 | 511* | **F102101369** | 211 | 511* | **F102101371** | 211 | 511* |

* incl. cardboard drilling template

**2 Cover cap for F8 inset panel**
**Single item: Can be used on left/right**

| | Aluminium metallic | | White | | Stone | |
|---|---|---|---|---|---|---|
| | Art.-no. | PU | Art.-no. | PU | Art.-no. | PU |
| | **F102109572** | 218 | **F102101382** | 218 | **F102101384** | 218 |

**3 Front holder**
**Single item: incl. screws, can be used on left/right**

| Description | Art.-no. | PU |
|---|---|---|
| For screw fixing | **F092101589** | 223 |

**4 Front-bottom connector (optional)**
**Single item**

| Description | Art.-no. | PU |
|---|---|---|
| Recommended from KB 600 | **F145117993** | 223 |

**5 DWD XP drawer sides H95 and clip H86 for wooden back panel**
**see page 16**

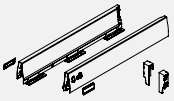

## PAGE REFERENCES


| | | | | | |
|---|---|---|---|---|---|
| Drawer sides | 11 | Application examples | 72 | Organising systems | 103 |
| Slides | 50 | Technical information | 76 | Assembly technology | 124 |
| Accessories | 70 | Sensomatic | 81 | Assembly aids | 128 |

## INSTALLATION INFORMATION

All dimensions in millimetres

### Installation dimensions

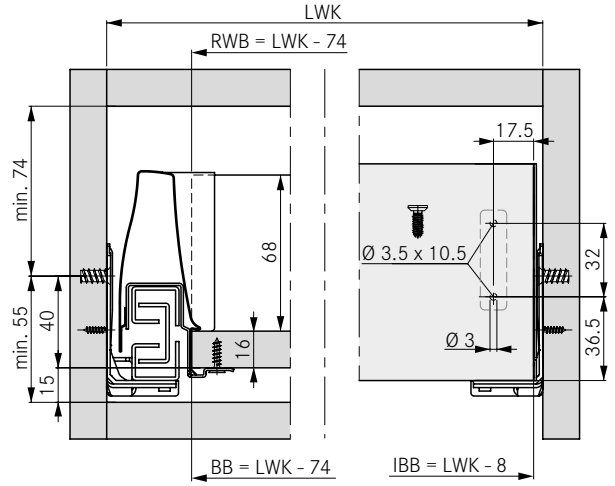


### Cutting dimensions for 16 mm chipboard

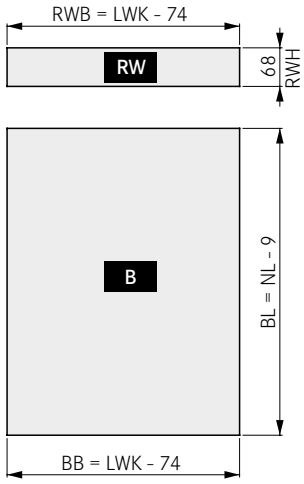


### Cutting dimensions for front panel profile

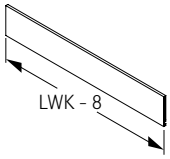


### Exploded view drawing

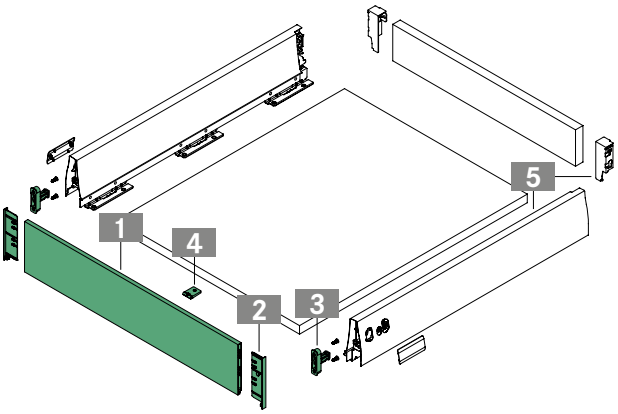


### Fixing positions for full extension slide

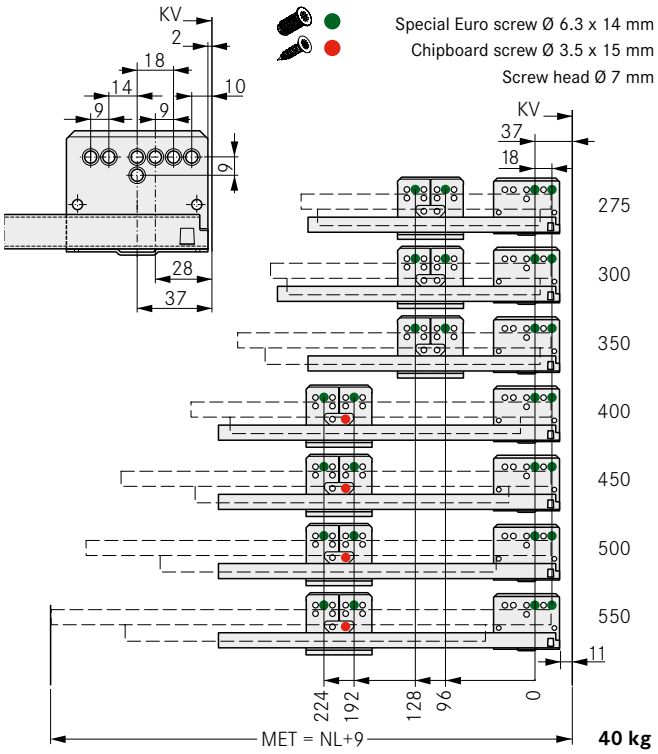


**Note:** Full extension slide, 60 kg, see Slides section (from page 52)

## LEGEND

| | | | | | |
|---|---|---|---|---|---|
| B | Bottom panel | KV | Front edge of cabinet | NL | Nominal length |
| BB | Bottom panel width | L | Length | RW | Back panel |
| BL | Bottom panel length | LWK | Inside cabinet width | RWB | Width of back panel |
| IBB | Inset panel width | MET | Minimum installation depth | RWH | Height of back panel |

# DWD XP

## F8 inset drawer H95 with rectangular railing

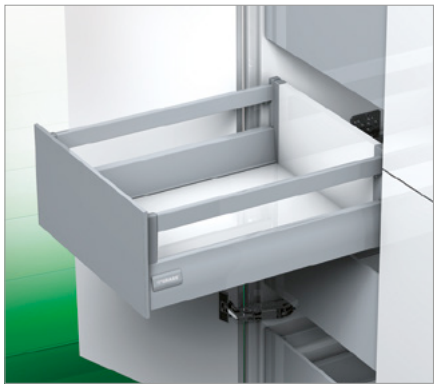

- Colour-coordinated aluminium front panel profile for cutting to length
- High-quality design with smooth inside and outside surfaces
- Identical dimensions as those of standard drawer (internal depth)

**Packaging unit (PU):**
207 = 10 units in a cardboard box
214 = 30 units in a cardboard box
223 = 100 units in a cardboard box
233 = 200 units in a cardboard box
507 = 10 units in PE in a cardboard box

## ORDER INFORMATION

**1 F8 inset panel for inset drawer H95 with rectangular railing**
**Single item: For cutting to length**

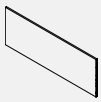

| L | Aluminium metallic | | | | White | | | | Stone | | | |
|---|---|---|---|---|---|---|---|---|---|---|---|---|
| | Art.-no. | PU | | | Art.-no. | PU | | | Art.-no. | PU | | |
| 1160 | **F092101380** | 207 | 507* | | **F102101377** | 207 | 507* | | **F102101379** | 207 | 507* | |

* incl. cardboard drilling template

**2 Cover cap for F8 inset panel**
**Single item: Can be used on left/right**

| | Aluminium metallic | | | | White | | | | Stone | | | |
|---|---|---|---|---|---|---|---|---|---|---|---|---|
| | Art.-no. | PU | | | Art.-no. | PU | | | Art.-no. | PU | | |
| | **F102109573** | 214 | | | **F102101449** | 214 | | | **F102101451** | 214 | | |

**3 Rectangular screw-on railing**
**Set: Railing, railing clip (back) and cover cap, one left, one right**

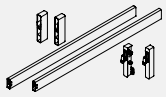

| NL | Aluminium metallic | | | | White | | | | Stone | | | |
|---|---|---|---|---|---|---|---|---|---|---|---|---|
| | Art.-no. | PU | | | Art.-no. | PU | | | Art.-no. | PU | | |
| 400 | **F092077409** | 507 | | | **F092072183** | 507 | | | **F092136335** | 507 | | |
| 450 | **F092077410** | 507 | | | **F092072184** | 507 | | | **F092136336** | 507 | | |
| 500 | **F092077411** | 507 | | | **F092072185** | 507 | | | **F092136337** | 507 | | |
| 550 | **F092077412** | 507 | | | **F092072186** | 507 | | | **F092136338** | 507 | | |

**4 Front holder**
**Single item: incl. screws, can be used on left/right**

| Description | Art.-no. | PU | | |
|---|---|---|---|---|
| For screw fixing | **F092101589** | 223 | | |

**5 Railing clip (front)**
**Single item: incl. screws, can be used on left/right**

| Description | Art.-no. | PU | | |
|---|---|---|---|---|
| For screw fixing | **F102101587** | 233 | | |

**6 Front-bottom connector (optional)**
**Single item**

| Description | Art.-no. | PU | | |
|---|---|---|---|---|
| Recommended from KB 600 | **F145117993** | 223 | | |

**7 DWD XP drawer sides H95 and clip H182 for wooden back panel**
**see page 18**

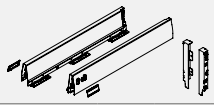

## PAGE REFERENCES


| | | | | | |
|---|---|---|---|---|---|
| Drawer sides | 11 | Application examples | 72 | Organising systems | 103 |
| Slides | 50 | Technical information | 76 | Assembly technology | 124 |
| Accessories | 70 | Sensomatic | 81 | Assembly aids | 128 |

## INSTALLATION INFORMATION

All dimensions in millimetres

### Installation dimensions

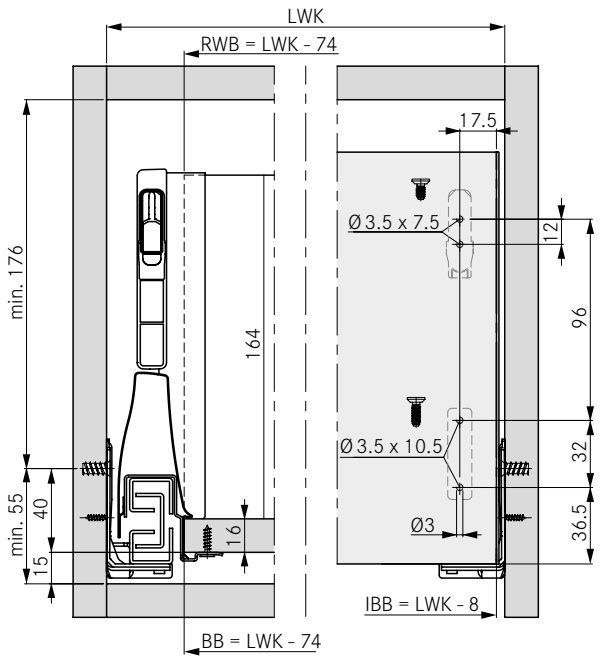


### Cutting dimensions for 16 mm chipboard

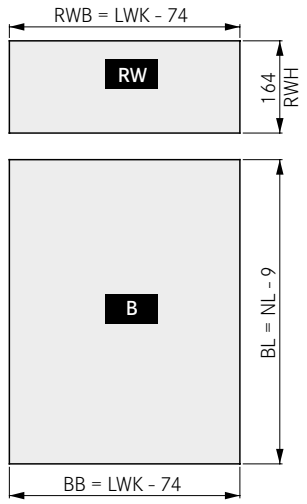


### Cutting dimensions for front panel profile

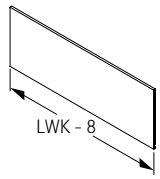


### Exploded view drawing

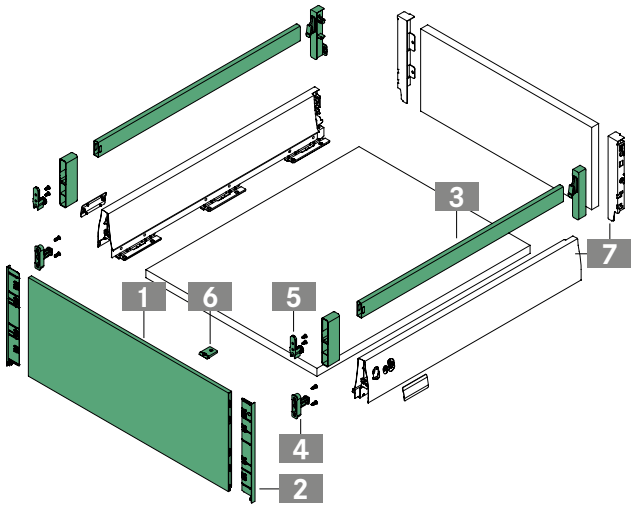


### Fixing positions for full extension slide

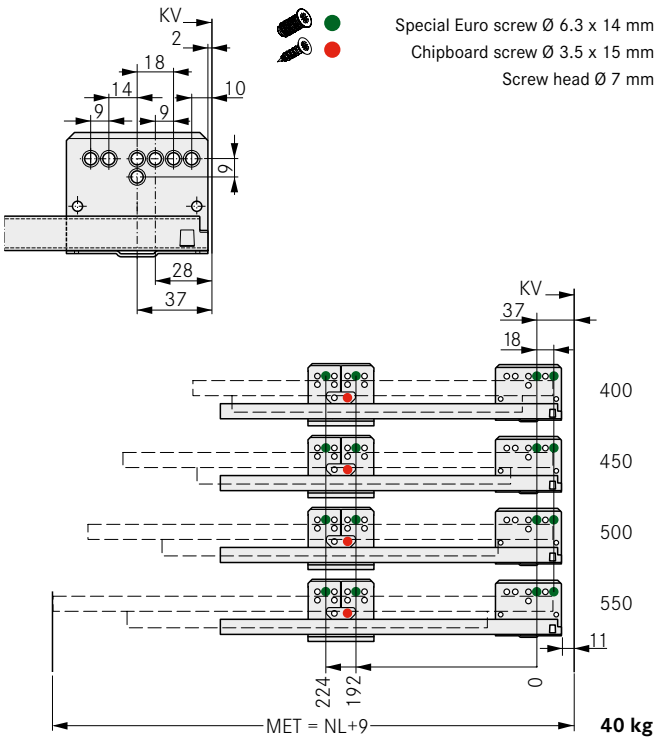


**Note:** Full extension slide, 60 kg, see Slides section (from page 52)

## LEGEND

| | | | | | |
|---|---|---|---|---|---|
| B | Bottom panel | KV | Front edge of cabinet | NL | Nominal length |
| BB | Bottom panel width | L | Length | RW | Back panel |
| BL | Bottom panel length | LWK | Inside cabinet width | RWB | Width of back panel |
| IBB | Inset panel width | MET | Minimum installation depth | RWH | Height of back panel |

# DWD XP

## F8 inset drawer H95 with round railing

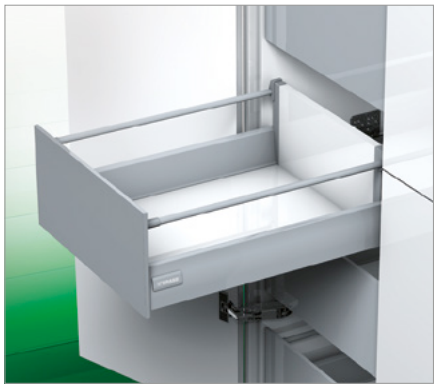

- Colour-coordinated aluminium front panel profile for cutting to length
- High-quality design with smooth inside and outside surfaces
- Identical dimensions as those of standard drawer (internal depth)

**Packaging unit (PU):**
207 = 10 units in a cardboard box
214 = 30 units in a cardboard box
223 = 100 units in a cardboard box
507 = 10 units in PE in a cardboard box
513 = 25 units in PE in a cardboard box

## ORDER INFORMATION

**1 F8 inset panel for inset drawer H95 with round railing**
**Single item: For cutting to length**

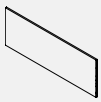

| L | Aluminium metallic | | | | White | | | | Stone | | | |
|---|---|---|---|---|---|---|---|---|---|---|---|---|
| | Art.-no. | PU | | | Art.-no. | PU | | | Art.-no. | PU | | |
| 1160 | **F092101380** | 207 | 507* | | **F102101377** | 207 | 507* | | **F102101379** | 207 | 507* | |

* incl. cardboard drilling template

**2 Cover cap for F8 inset panel**
**Single item: Can be used on left/right**

| | Aluminium metallic | | | | White | | | | Stone | | | |
|---|---|---|---|---|---|---|---|---|---|---|---|---|
| | Art.-no. | PU | | | Art.-no. | PU | | | Art.-no. | PU | | |
| | **F102109573** | 214 | | | **F102101449** | 214 | | | **F102101451** | 214 | | |

**3 Round screw-on railing**
**Set: Railing, railing clip (front/back) and cover cap, one left, one right**

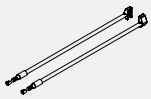

| NL | Aluminium metallic | | | | White | | | | Stone | | | |
|---|---|---|---|---|---|---|---|---|---|---|---|---|
| | Art.-no. | PU | | | Art.-no. | PU | | | Art.-no. | PU | | |
| 400 | **F092075878** | 513 | 223 | | **F092075879** | 513 | 223 | | **F092136299** | 513 | | |
| 450 | **F092075881** | 513 | 223 | | **F092075882** | 513 | 223 | | **F092136300** | 513 | | |
| 500 | **F092075884** | 513 | 223 | | **F092075885** | 513 | 223 | | **F092136301** | 513 | | |
| 550 | **F092075887** | 513 | | | **F092075888** | 513 | | | **F092136302** | 513 | | |
| 600 | **F092075890** | 513 | | | **F092071890** | 513 | | | **F092136303** | 513 | | |

**4 Front holder**
**Single item: incl. screws, can be used on left/right**

| Description | Art.-no. | PU | | |
|---|---|---|---|---|
| For screw fixing | **F092101589** | 223 | | |

**5 Railing clip (front)**
**Single item: incl. screw, can be used on left/right**

| Description | Art.-no. | PU | | |
|---|---|---|---|---|
| For screw fixing | **F092101590** | 223 | | |

**6 Front-bottom connector (optional)**
**Single item**

| Description | Art.-no. | PU | | |
|---|---|---|---|---|
| Recommended from KB 600 | **F145117993** | 223 | | |

**7 DWD XP drawer sides H95 and clip H182 for wooden back panel**
**see page 22**

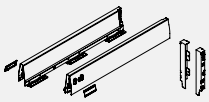


| | | | | | |
|---|---|---|---|---|---|
| Drawer sides | 11 | Accessories | 70 | Sensomatic | 81 |
| Slides | 50 | Application examples | 72 | Organising systems | 103 |
| Add-on systems | 64 | Technical information | 76 | Assembly technology | 124 |

## INSTALLATION INFORMATION

All dimensions in millimetres

### Installation dimensions

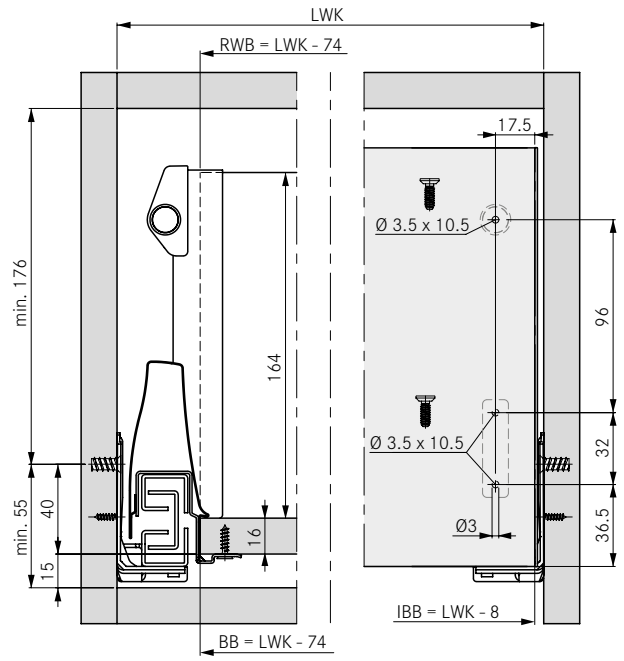


### Cutting dimensions for 16 mm chipboard

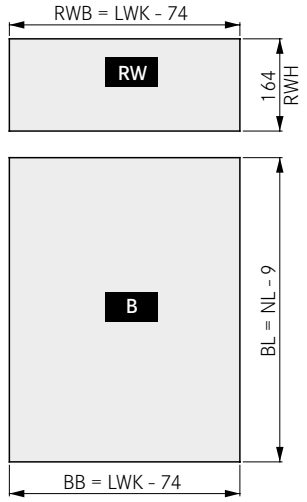


### Cutting dimensions for front panel profile

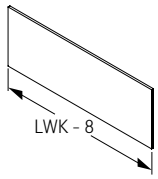


### Exploded view drawing

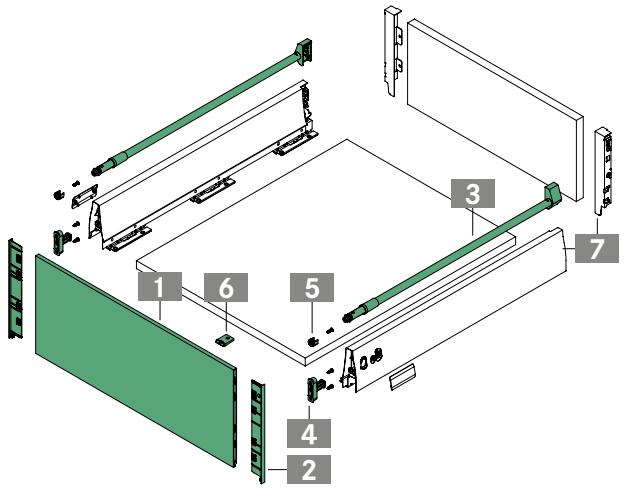


### Fixing positions for full extension slide

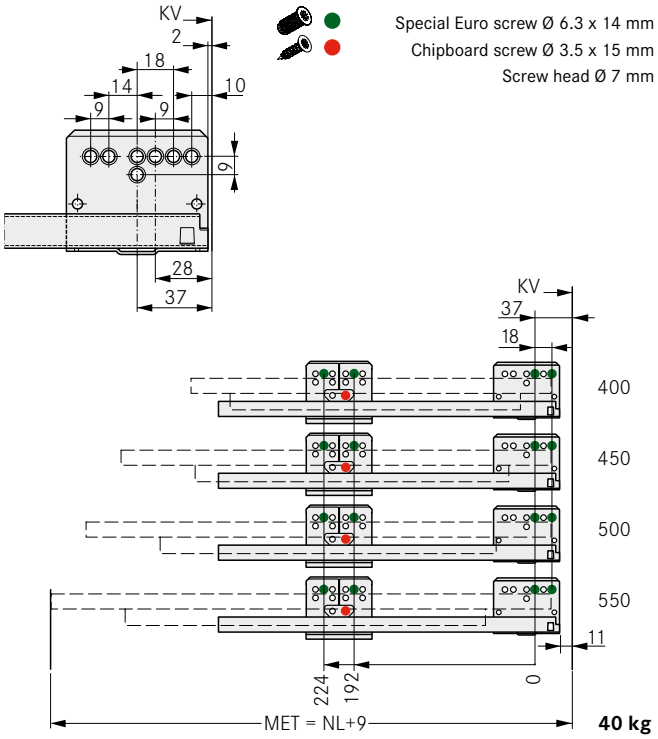


**Note:** Full extension slide, 60 kg, see Slides section (from page 52)

## LEGEND

| | | | | | |
|---|---|---|---|---|---|
| B | Bottom panel | KV | Front edge of cabinet | NL | Nominal length |
| BB | Bottom panel width | L | Length | RW | Back panel |
| BL | Bottom panel length | LWK | Inside cabinet width | RWB | Width of back panel |
| IBB | Inset panel width | MET | Minimum installation depth | RWH | Height of back panel |

# DWD XP

## F8 inset drawer H95 with TOP add-on

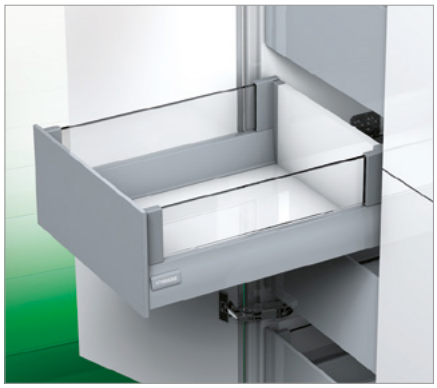

- Colour-coordinated aluminium front panel profile for cutting to length
- High-quality design with smooth inside and outside surfaces
- Identical dimensions as those of standard drawer (internal depth)

**Packaging unit (PU):**
207 = 10 units in a cardboard box
214 = 30 units in a cardboard box
223 = 100 units in a cardboard box
507 = 10 units in PE in a cardboard box
513 = 25 units in PE in a cardboard box

## ORDER INFORMATION

**1 F8 inset panel for inset drawer H95 with TOP add-on**
**Single item: For cutting to length**

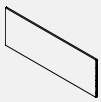

| L | Aluminium metallic | | | White | | | Stone | | |
|---|---|---|---|---|---|---|---|---|---|
| | Art.-no. | PU | | Art.-no. | PU | | Art.-no. | PU | |
| 1160 | **F092101380** | 207 | 507* | **F102101377** | 207 | 507* | **F102101379** | 207 | 507* |

* incl. cardboard drilling template

**2 Cover cap for F8 inset panel**
**Single item: Can be used on left/right**

| | Aluminium metallic | | White | | Stone | |
|---|---|---|---|---|---|---|
| | Art.-no. | PU | Art.-no. | PU | Art.-no. | PU |
| | **F102109573** | 214 | **F102101449** | 214 | **F102101451** | 214 |

**3 TOP add-on**
**Set: Glass clip (front/back), one left, one right**

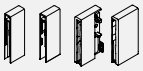

| | Aluminium metallic | | White | | Stone | |
|---|---|---|---|---|---|---|
| | Art.-no. | PU | Art.-no. | PU | Art.-no. | PU |
| | **F092116696** | 223 | **F092116698** | 223 | **F092136357** | 513 |

**4 Front holder**
**Single item: incl. screws, can be used on left/right**

| Description | Art.-no. | PU |
|---|---|---|
| For screw fixing | **F092101589** | 223 |

**5 Add-on clip (front)**
**Single item: Can be used on left/right**

| Description | Art.-no. | PU |
|---|---|---|
| For screw fixing | **F092101588** | 223 |

**6 Front-bottom connector (optional)**
**Single item**

| Description | Art.-no. | PU |
|---|---|---|
| Recommended from cabinet width 600 | **F145117993** | 223 |

**7 DWD XP drawer sides H95 and clip H182 for wooden back panel**
**see pages 16 and 18**

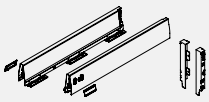

## PAGE REFERENCES


| | | | | | |
|---|---|---|---|---|---|
| Drawer sides | 11 | Application examples | 72 | Organising systems | 103 |
| Slides | 50 | Technical information | 76 | Assembly technology | 124 |
| Accessories | 70 | Sensomatic | 81 | Assembly aids | 128 |

## INSTALLATION INFORMATION

All dimensions in millimetres

### Installation dimensions

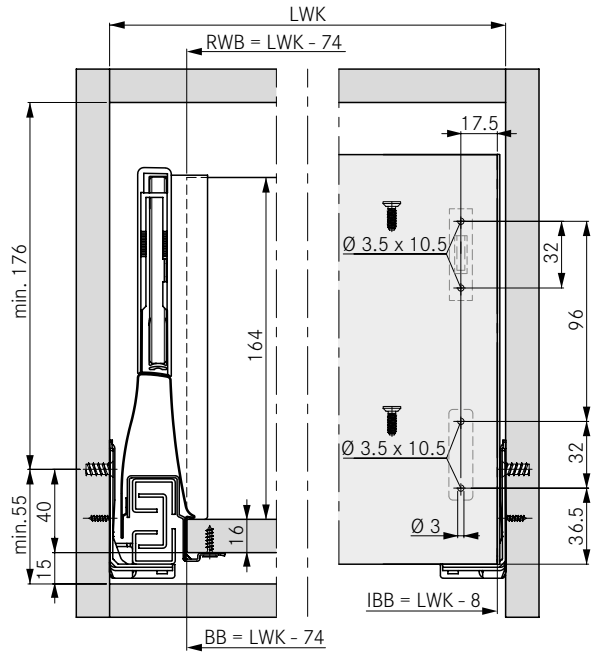


### Cutting dimensions for 16 mm chipboard

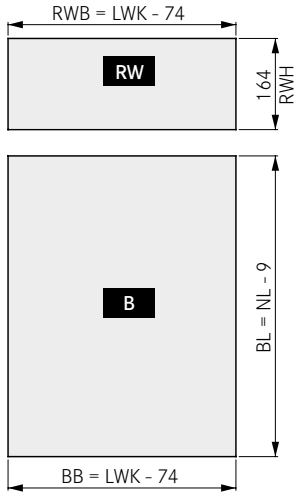


### Cutting dimensions for front panel profile

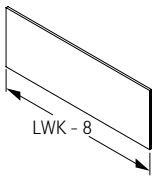


### Glass cutting dim.

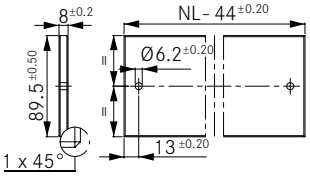


### Exploded view drawing

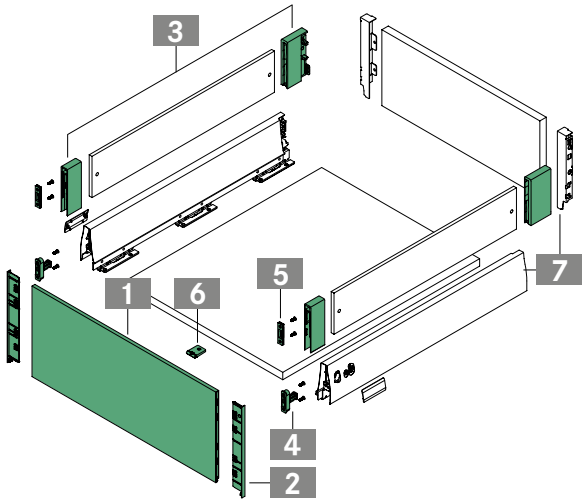


### Fixing positions for full extension slide

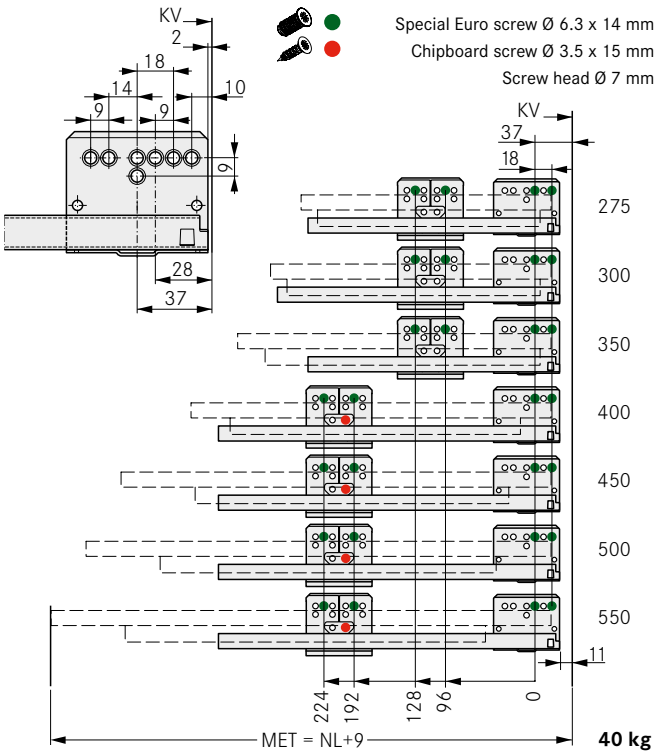


**Note:** Full extension slide, 60 kg, see Slides section (from page 52)

## LEGEND

| | | | | | |
|---|---|---|---|---|---|
| B | Bottom panel | KV | Front edge of cabinet | NL | Nominal length |
| BB | Bottom panel width | L | Length | RW | Back panel |
| BL | Bottom panel length | LWK | Inside cabinet width | RWB | Width of back panel |
| IBB | Inset panel width | MET | Minimum installation depth | RWH | Height of back panel |

# DWD XP

## Inset drawer H95

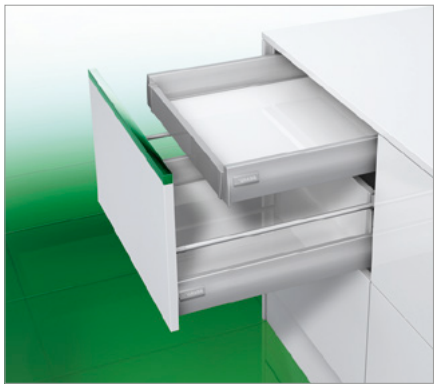

- Colour-coordinated aluminium front panel profile for cutting to length
- Easy to fit

**Packaging unit (PU):**
211 = 20 units in a cardboard box
223 = 100 units in a cardboard box
516 = 40 units in PE in a cardboard box

## ORDER INFORMATION

**1 Inset panel for inset drawer H95**
**Single item: For cutting to length**

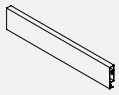

| L | Aluminium metallic | | | | White | | | | Stone | | | | | | | |
|---|---|---|---|---|---|---|---|---|---|---|---|---|---|---|---|---|
| | Art.-no. | PU | | | Art.-no. | PU | | | Art.-no. | PU | | | | | | |
| 1077 | **F092083056** | 211 | | | **F092083077** | 211 | | | **F092136346** | 211 | | | | | | |

**2 Clip for inset panel**
**Set: One left, one right**

| | Aluminium metallic | | | | White | | | | Stone | | | | | | | |
|---|---|---|---|---|---|---|---|---|---|---|---|---|---|---|---|---|
| | Art.-no. | PU | | | Art.-no. | PU | | | Art.-no. | PU | | | | | | |
| | **F092083068** | 516 | 223 | | **F092076840** | 516 | 223 | | **F092136343** | 516 | | | | | | |

**3 DWD XP drawer sides H95 and clip H86 for wooden back panel**
**see page 16**

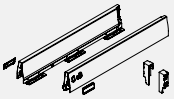

## PAGE REFERENCES


| | | | | | |
|---|---|---|---|---|---|
| Drawer sides | 11 | Application examples | 72 | Organising systems | 103 |
| Slides | 50 | Technical information | 76 | Assembly technology | 124 |
| Accessories | 70 | Sensomatic | 81 | Assembly aids | 128 |

## INSTALLATION INFORMATION

All dimensions in millimetres

### Installation dimensions

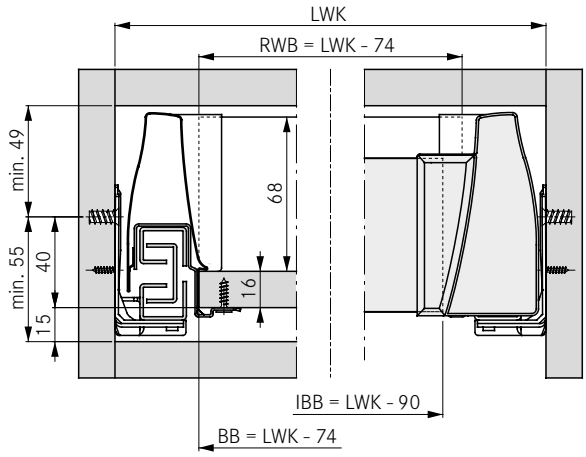


### Cutting dimensions for 16 mm chipboard

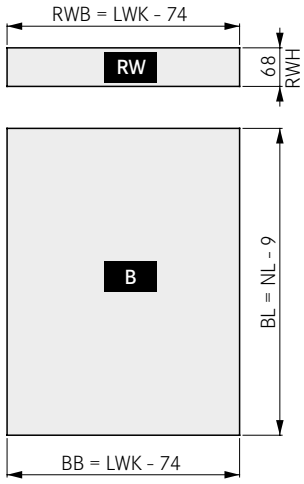


### Cutting dimensions for front panel profile

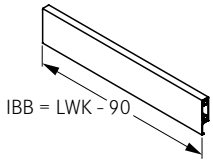


### Exploded view drawing

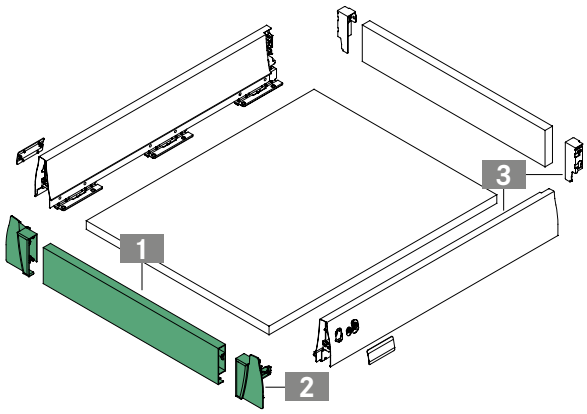


### Fixing positions for full extension slide

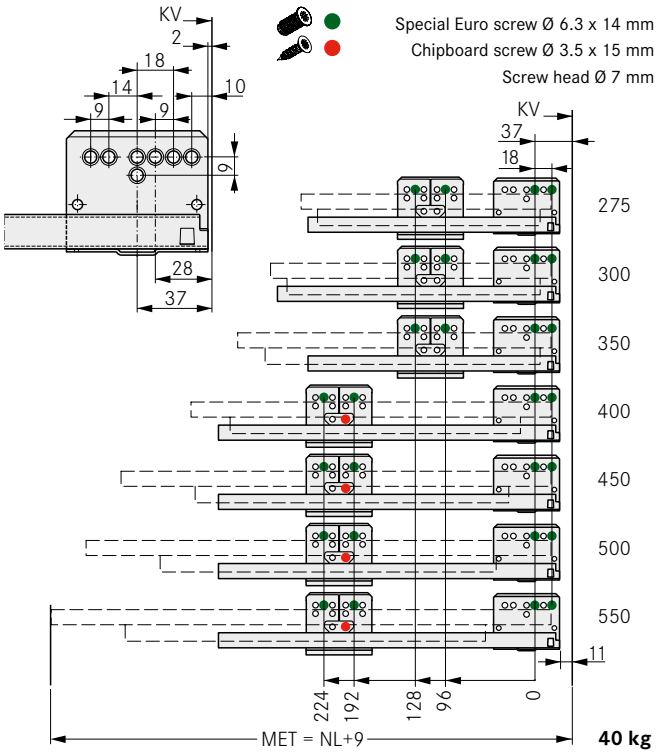


**Note:** Full extension slide, 60 kg, see Slides section (from page 52)

## LEGEND

| | | | | | |
|---|---|---|---|---|---|
| B | Bottom panel | KV | Front edge of cabinet | NL | Nominal length |
| BB | Bottom panel width | L | Length | RW | Back panel |
| BL | Bottom panel length | LWK | Inside cabinet width | RWB | Width of back panel |
| IBB | Inset panel width | MET | Minimum installation depth | RWH | Height of back panel |

# DWD XP

## Inset drawer H95 with rectangular railing

- Colour-coordinated aluminium front panel profile for cutting to length
- Easy to fit

**Packaging unit (PU):**
211 = 20 units in a cardboard box
507 = 10 units in PE in a cardboard box
516 = 40 units in PE in a cardboard box

## ORDER INFORMATION

**1 Inset panel for inset drawer H95 with rectangular railing**
**Single item: For cutting to length**

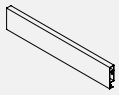

| L | Aluminium metallic | | White | | Stone | |
|---|---|---|---|---|---|---|
| | Art.-no. | PU | Art.-no. | PU | Art.-no. | PU |
| 1077 | **F092083056** | 211 | **F092083077** | 211 | **F092136346** | 211 |

**2 Clip for inset panel and rectangular railing**
**Set: Clip and cover cap, one left, one right**

| | Aluminium metallic | | White | | Stone | |
|---|---|---|---|---|---|---|
| | Art.-no. | PU | Art.-no. | PU | Art.-no. | PU |
| | **F092077415** | 516 | **F092077416** | 516 | **F092136345** | 516 |

**3 Rectangular screw-on railing**
**Set: Railing and railing clip (back), one left, one right**

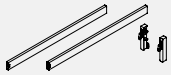

| NL | Aluminium metallic | | White | | Stone | |
|---|---|---|---|---|---|---|
| | Art.-no. | PU | Art.-no. | PU | Art.-no. | PU |
| 400 | **F092077409** | 507 | **F092072183** | 507 | **F092136335** | 507 |
| 450 | **F092077410** | 507 | **F092072184** | 507 | **F092136336** | 507 |
| 500 | **F092077411** | 507 | **F092072185** | 507 | **F092136337** | 507 |
| 550 | **F092077412** | 507 | **F092072186** | 507 | **F092136338** | 507 |

**4 Rectangular cross railing**
**Single item: For cutting to length**

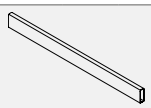

| L | Aluminium metallic | | White | | Stone | |
|---|---|---|---|---|---|---|
| | Art.-no. | PU | Art.-no. | PU | Art.-no. | PU |
| 1150 | **F092077417** | 211 | **F092076916** | 211 | **F092136342** | 211 |

**5 DWD XP drawer sides H95 and clip H182 for wooden back panel**
**see page 18**

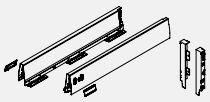

## PAGE REFERENCES


| | | | | | |
|---|---|---|---|---|---|
| Drawer sides | 11 | Application examples | 72 | Organising systems | 103 |
| Slides | 50 | Technical information | 76 | Assembly technology | 124 |
| Accessories | 70 | Sensomatic | 81 | Assembly aids | 128 |

## INSTALLATION INFORMATION

All dimensions in millimetres

### Installation dimensions

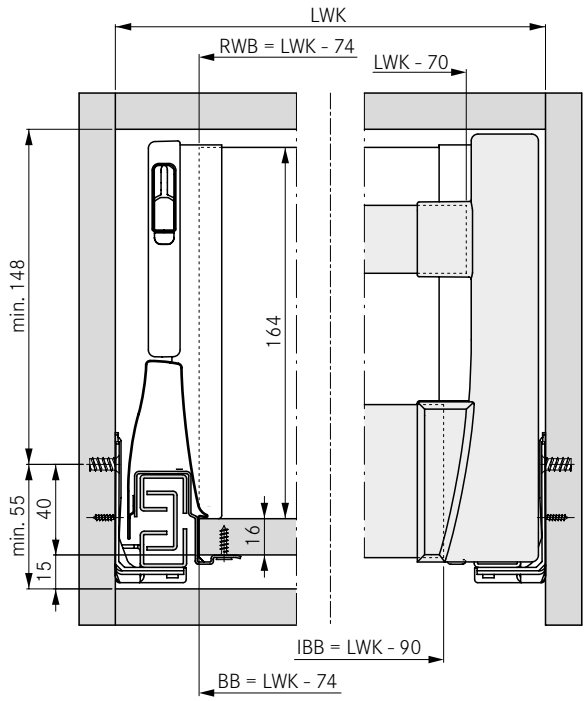


### Cutting dimensions for 16 mm chipboard

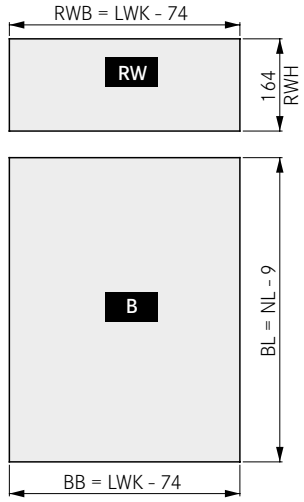


### Cutting dimensions for rectangular railing profile

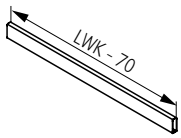


### Cutting dimensions for front panel profile

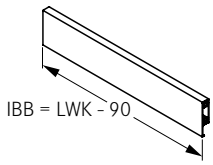


### Exploded view drawing

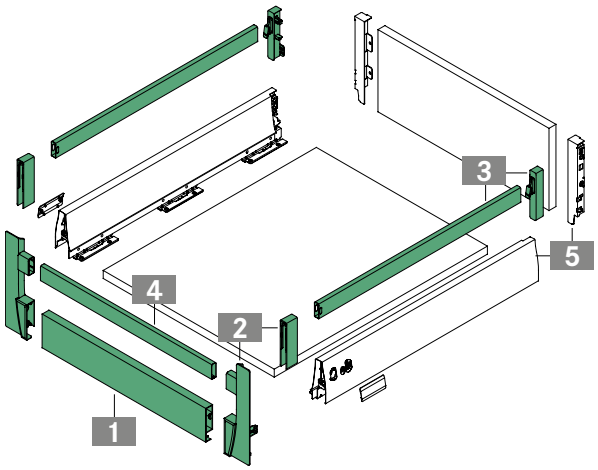


### Fixing positions for full extension slide

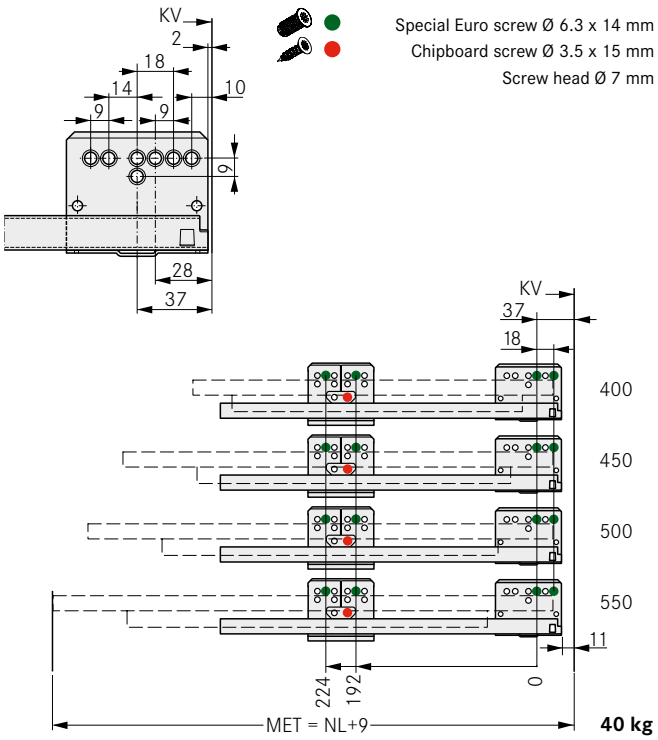


**Note:** Full extension slide, 60 kg, see Slides section (from page 52)

## LEGEND

| | | | | | |
|---|---|---|---|---|---|
| B | Bottom panel | KV | Front edge of cabinet | NL | Nominal length |
| BB | Bottom panel width | L | Length | RW | Back panel |
| BL | Bottom panel length | LWK | Inside cabinet width | RWB | Width of back panel |
| IBB | Inset panel width | MET | Minimum installation depth | RWH | Height of back panel |

# DWD XP

## Inset drawer H95 with round railing

- Colour-coordinated aluminium front panel profile for cutting to length
- Easy to fit

**Packaging unit (PU):**
211 = 20 units in a cardboard box
223 = 100 units in a cardboard box
513 = 25 units in PE in a cardboard box
516 = 40 units in PE in a cardboard box

## ORDER INFORMATION

**1 Inset panel for inset drawer H95 with round railing**
**Single item: For cutting to length**

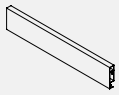

| L | Aluminium metallic | | | | White | | | | Stone | | | | | | | |
|---|---|---|---|---|---|---|---|---|---|---|---|---|---|---|---|---|
| | Art.-no. | PU | | | Art.-no. | PU | | | Art.-no. | PU | | | | | | |
| 1077 | F092083056 | 211 | | | F092083077 | 211 | | | F092136346 | 211 | | | | | | |

**2 Clip for inset panel and round railing**
**Set: Clip, one left, one right**

| | Aluminium metallic | | | | White | | | | Stone | | | | | | | |
|---|---|---|---|---|---|---|---|---|---|---|---|---|---|---|---|---|
| | Art.-no. | PU | | | Art.-no. | PU | | | Art.-no. | PU | | | | | | |
| | F092083101 | 516 | 223 | | F092076841 | 516 | 223 | | F092136344 | 516 | | | | | | |

**3 Round railing for inset drawer**
**Set: Railing, railing clip (back) and cover cap, one left, one right**

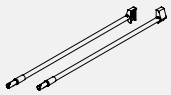

| NL | Aluminium metallic | | | | White | | | | Stone | | | | | | | |
|---|---|---|---|---|---|---|---|---|---|---|---|---|---|---|---|---|
| | Art.-no. | PU | | | Art.-no. | PU | | | Art.-no. | PU | | | | | | |
| 400 | F092078012 | 513 | | | F092078015 | 513 | | | F092136299 | 513 | | | | | | |
| 450 | F092078013 | 513 | | | F092078016 | 513 | | | F092136300 | 513 | | | | | | |
| 500 | F092082446 | 513 | | | F092082447 | 513 | | | F092136301 | 513 | | | | | | |
| 550 | F092116378 | 513 | | | F092078017 | 513 | | | F092136302 | 513 | | | | | | |
| 600 | F092078014 | 513 | | | F092078018 | 513 | | | F092136303 | 513 | | | | | | |

**4 Round cross railing**
**Single item: For cutting to length**

| L | Aluminium metallic | | | | White | | | | Stone | | | | | | | |
|---|---|---|---|---|---|---|---|---|---|---|---|---|---|---|---|---|
| | Art.-no. | PU | | | Art.-no. | PU | | | Art.-no. | PU | | | | | | |
| 1087 | F092082461 | 211 | | | F092082479 | 211 | | | F092136341 | 211 | 223 | | | | | |

**5 DWD XP drawer sides H95 and clip H182 for wooden back panel**
**see page 22**

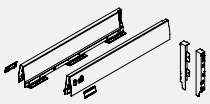

## PAGE REFERENCES


| | | | | | |
|---|---|---|---|---|---|
| Drawer sides | 11 | Accessories | 70 | Sensomatic | 81 |
| Slides | 50 | Application examples | 72 | Organising systems | 103 |
| Add-on systems | 64 | Technical information | 76 | Assembly technology | 124 |

## INSTALLATION INFORMATION

All dimensions in millimetres

### Installation dimensions

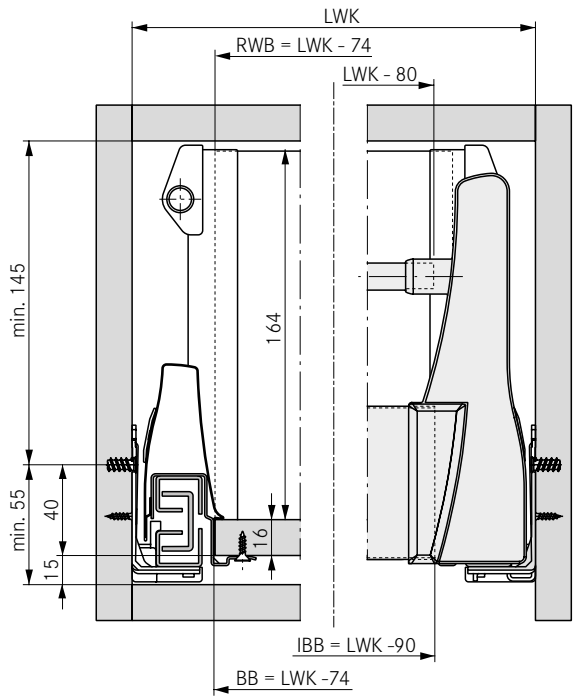


### Cutting dimensions for 16 mm chipboard

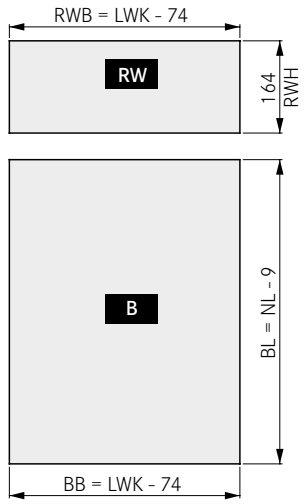


### Cutting dimensions for round railing profile

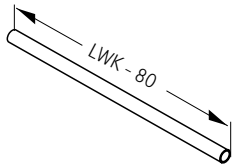


### Cutting dimensions for front panel profile

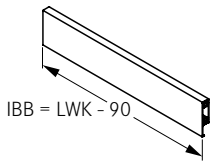


### Exploded view drawing

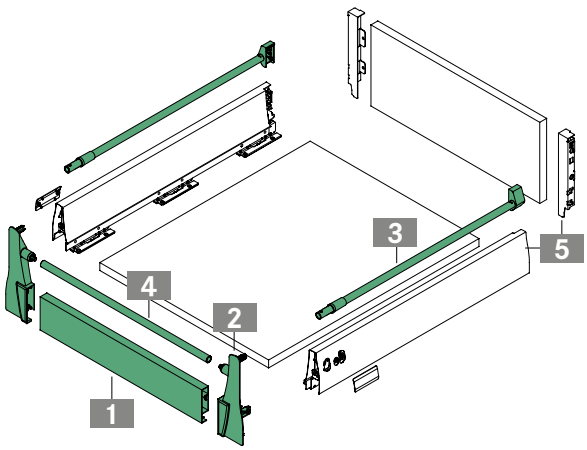


### Fixing positions for full extension slide

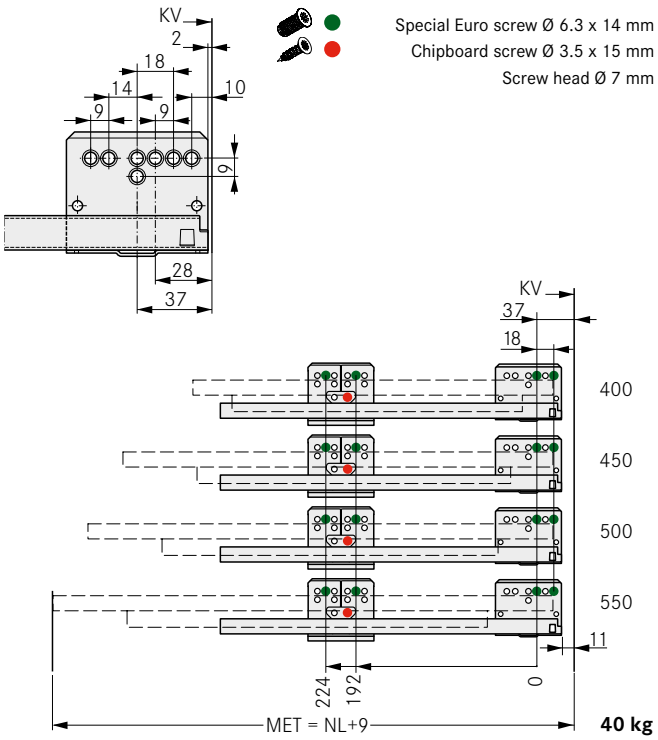


**Note:** Full extension slide, 60 kg, see Slides section (from page 52)

## LEGEND

| | | | | | |
|---|---|---|---|---|---|
| B | Bottom panel | KV | Front edge of cabinet | NL | Nominal length |
| BB | Bottom panel width | L | Length | RW | Back panel |
| BL | Bottom panel length | LWK | Inside cabinet width | RWB | Width of back panel |
| IBB | Inset panel width | MET | Minimum installation depth | RWH | Height of back panel |

# DWD XP

## Inset drawer H95 with rectangular railing and TOP add-on

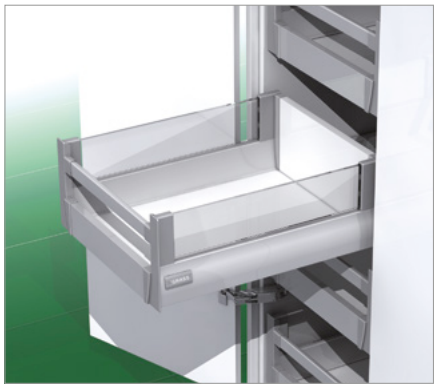

- Elegant add-on system
- Colour-coordinated aluminium front panel profile for cutting to length
- Easy to fit

**Packaging unit (PU):**
211 = 20 units in a cardboard box
223 = 100 units in a cardboard box
513 = 25 units in PE in a cardboard box
516 = 40 units in PE in a cardboard box

## ORDER INFORMATION

**1 Inset panel for inset drawer H95 with TOP add-on**
**Single item: For cutting to length**

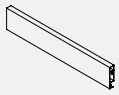

| L | Aluminium metallic | | White | | Stone | |
|---|---|---|---|---|---|---|
| | Art.-no. | PU | Art.-no. | PU | Art.-no. | PU |
| 1077 | **F092083056** | 211 | **F092083077** | 211 | **F092136346** | 211 |

**2 Clip for inset panel and TOP add-on**
**Set: Clip, one left, one right**

| | Aluminium metallic | | White | | Stone | |
|---|---|---|---|---|---|---|
| | Art.-no. | PU | Art.-no. | PU | Art.-no. | PU |
| | **F092077415** | 516 | **F092077416** | 516 | **F092136345** | 516 |

**3 Rectangular cross railing**
**Single item: For cutting to length**

| L | Aluminium metallic | | White | | Stone | |
|---|---|---|---|---|---|---|
| | Art.-no. | PU | Art.-no. | PU | Art.-no. | PU |
| 1150 | **F092077417** | 211 | **F092076916** | 211 | **F092136342** | 211 |

**4 TOP add-on**
**Set: Glass clip (front/back), one left, one right**

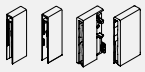

| | Aluminium metallic | | White | | Stone | |
|---|---|---|---|---|---|---|
| | Art.-no. | PU | Art.-no. | PU | Art.-no. | PU |
| | **F092116696** | 223 | **F092116698** | 223 | **F092136357** | 513 |

**5 DWD XP drawer sides H95 and clip H182 for wooden back panel**
**see pages 16 and 18**

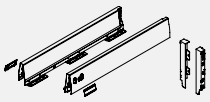

## PAGE REFERENCES


| | | | | | |
|---|---|---|---|---|---|
| Drawer sides | 11 | Application examples | 72 | Organising systems | 103 |
| Slides | 50 | Technical information | 76 | Assembly technology | 124 |
| Accessories | 70 | Sensomatic | 81 | Assembly aids | 128 |

## INSTALLATION INFORMATION

All dimensions in millimetres

### Installation dimensions

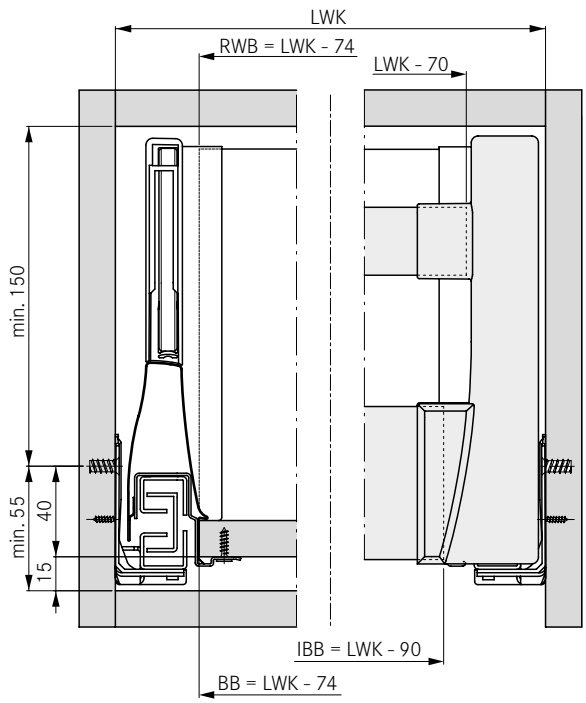


### Cutting dimensions for 16 mm chipboard

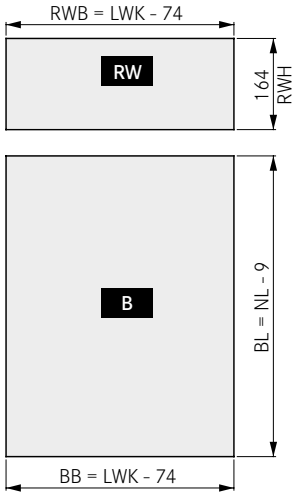


### Cutting dimensions for front panel and rectangular profile

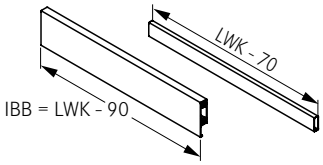


### Glass cutting dim.

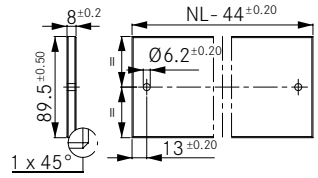


### Exploded view drawing

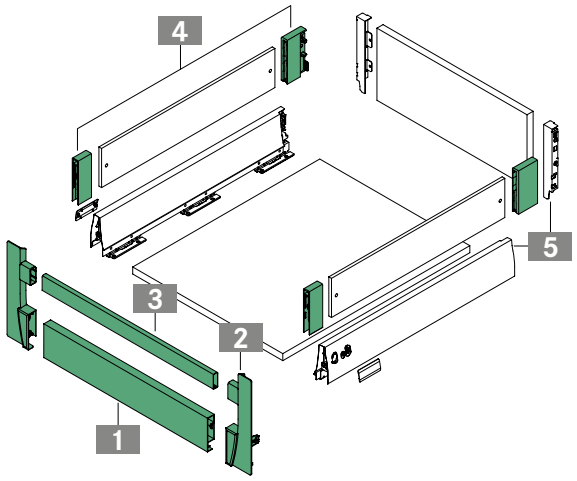


### Fixing positions for full extension slide

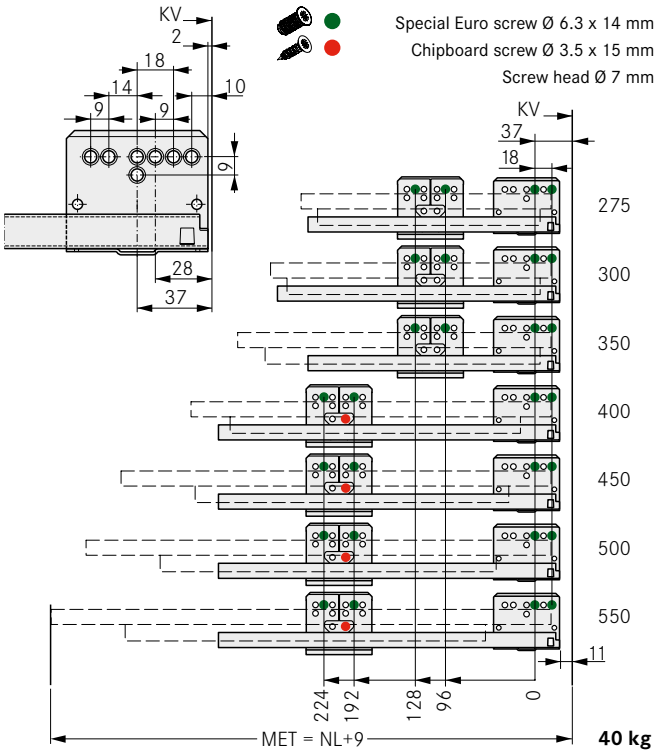


**Note:** Full extension slide, 60 kg, see Slides section (from page 52)

## LEGEND

| | | | | | |
|---|---|---|---|---|---|
| B | Bottom panel | KV | Front edge of cabinet | NL | Nominal length |
| BB | Bottom panel width | L | Length | RW | Back panel |
| BL | Bottom panel length | LWK | Inside cabinet width | RWB | Width of back panel |
| IBB | Inset panel width | MET | Minimum installation depth | RWH | Height of back panel |

# DWD XP SOFT-CLOSE

Full extension slide, 40 kg

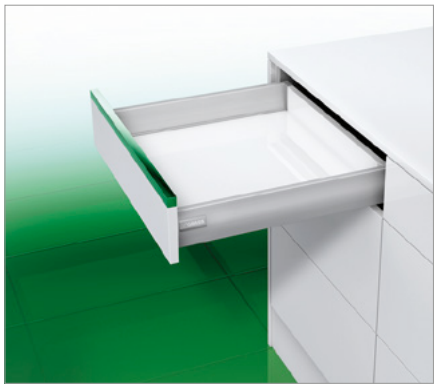

- Fully synchronised slide technology without mid-way knock
- Integrated Soft-close technology
- Excellent running characteristics
- Maximum lateral stability
- Minimum drawer deflection
- Safety lock and transport protection
- Suitable for all DWD XP drawer sides
- Load capacity 40 kg

**Packaging unit (PU):**
211 = 20 units in a cardboard box

## ORDER INFORMATION

**1 DWD XP full extension slide, 40 kg, Soft-close**
**Set: One left, one right**

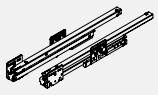

| NL | Art.-no. | PU | | | |
|---|---|---|---|---|---|
| 275 | **F091075473** | 211 | | | |
| 300 | **F091077407** | 211 | | | |
| 350 | **F091075474** | 211 | | | |
| 400 | **F091075475** | 211 | | | |
| 450 | **F091075476** | 211 | | | |
| 500 | **F091075477** | 211 | | | |
| 550 | **F091075478** | 211 | | | |

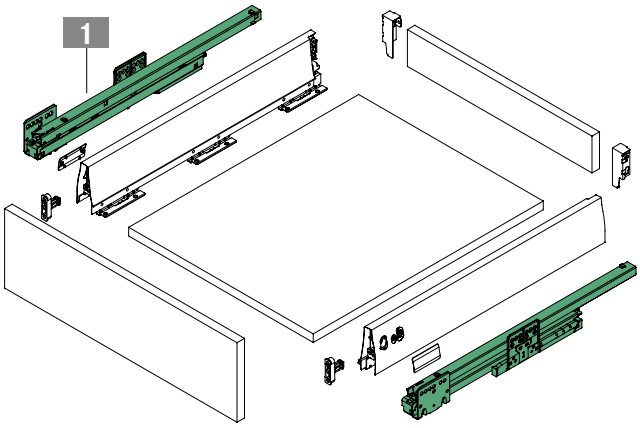


## PAGE REFERENCES


| | | | | | |
|---|---|---|---|---|---|
| Drawer sides | 11 | Application examples | 72 | Organising systems | 103 |
| Inset panels | 34 | Technical information | 76 | Assembly technology | 124 |
| Accessories | 70 | Sensomatic | 81 | Assembly aids | 128 |

## INSTALLATION INFORMATION

All dimensions in millimetres

Installation dimensions

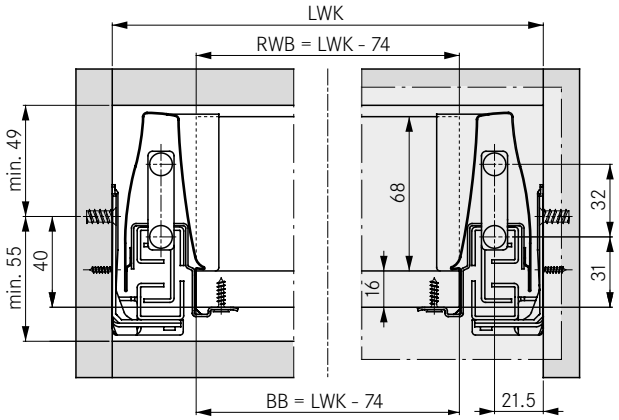


Fastening positions for full extension slide – drawer

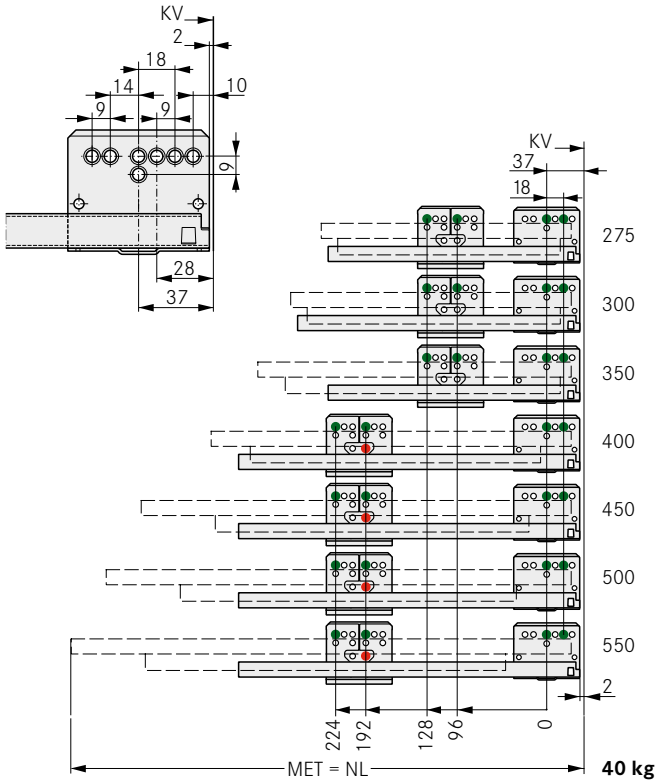


Fastening positions for full extension slide - inset drawer

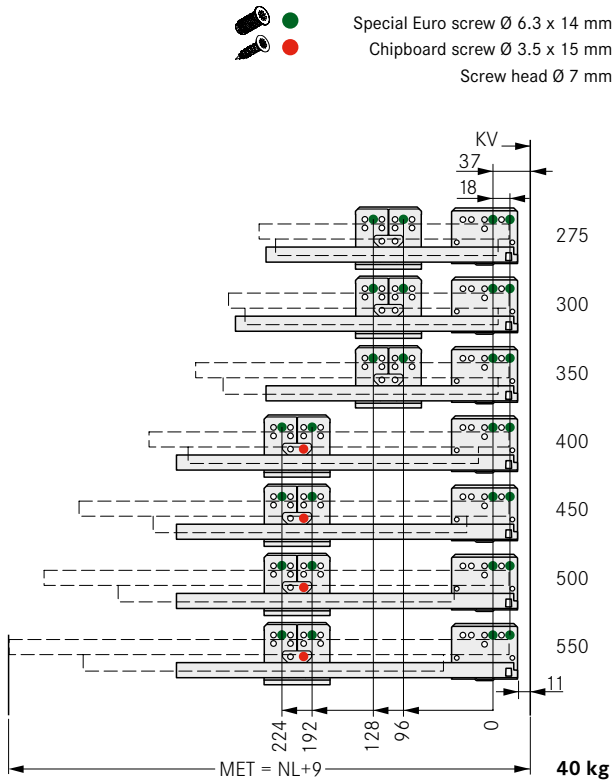


## LEGEND

| | | | | | |
|---|---|---|---|---|---|
| B | Bottom panel | KV | Front edge of cabinet | RW | Back panel |
| BB | Bottom panel width | LWK | Inside cabinet width | RWB | Width of back panel |
| FAS | Front overlay, side | MET | Minimum installation depth | RWH | Height of back panel |
| FST | Front overlay | NL | Nominal length | VAR | Can be chosen |

# DWD XP SOFT-CLOSE

Full extension slide, 60 kg

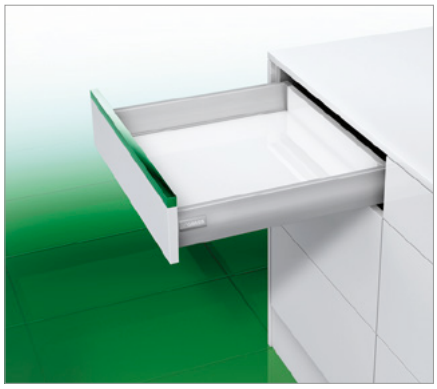

- Fully synchronised slide technology without mid-way knock
- Integrated Soft-close technology
- Excellent running characteristics
- Maximum lateral stability
- Minimum drawer deflection
- Safety lock and transport protection
- Suitable for all DWD XP drawer sides
- Load capacity 60 kg

**Packaging unit (PU):**
211 = 20 units in a cardboard box

## ORDER INFORMATION

**1 DWD XP full extension slide, 60 kg, Soft-close**
**Set: One left, one right**

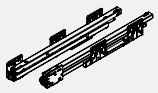

| NL | Art.-no. | PU | | | |
|---|---|---|---|---|---|
| 450 | **F091075528** | 211 | | | |
| 500 | **F091075529** | 211 | | | |
| 550 | **F091075530** | 211 | | | |
| 600 | **F091075531** | 211 | | | |
| 650 | **F091075532** | 211 | | | |

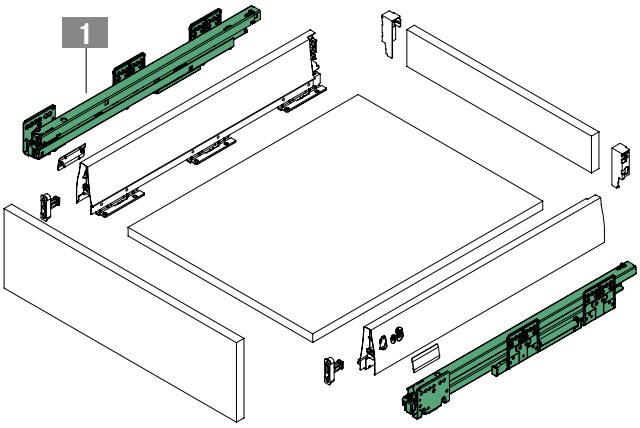


## PAGE REFERENCES


| | | | | | |
|---|---|---|---|---|---|
| Drawer sides | 11 | Application examples | 72 | Organising systems | 103 |
| Inset panels | 34 | Technical information | 76 | Assembly technology | 124 |
| Accessories | 70 | Sensomatic | 81 | Assembly aids | 128 |

## INSTALLATION INFORMATION

All dimensions in millimetres

Installation dimensions

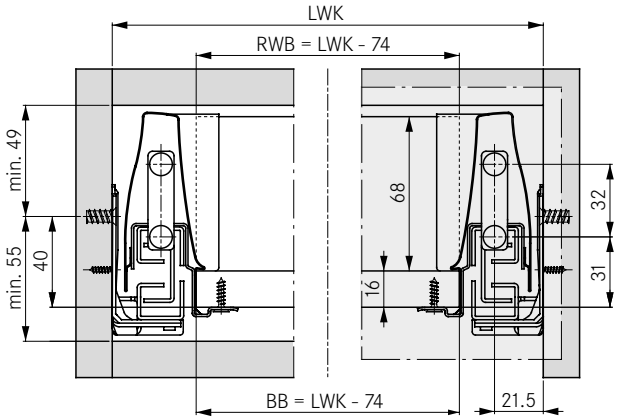


Fastening positions for full extension slide – drawer

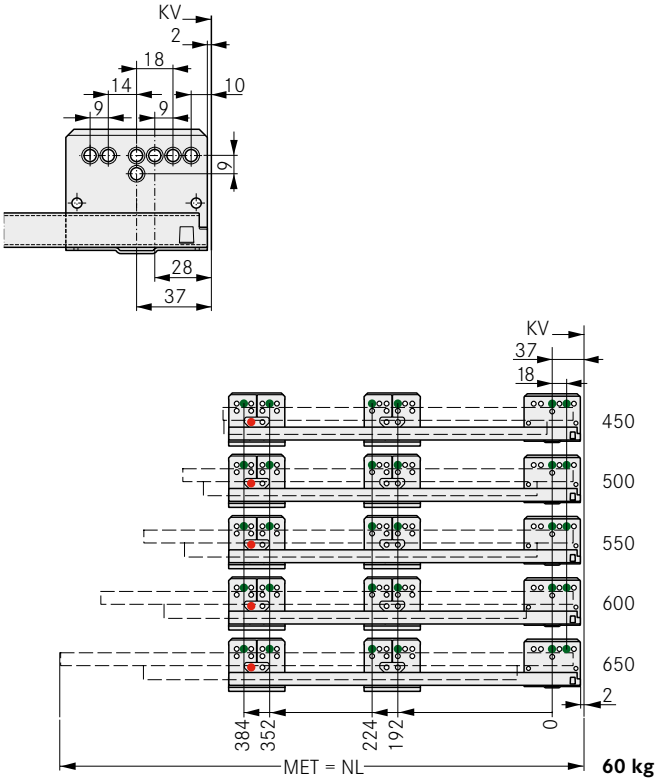


Fastening positions for full extension slide – inset drawer

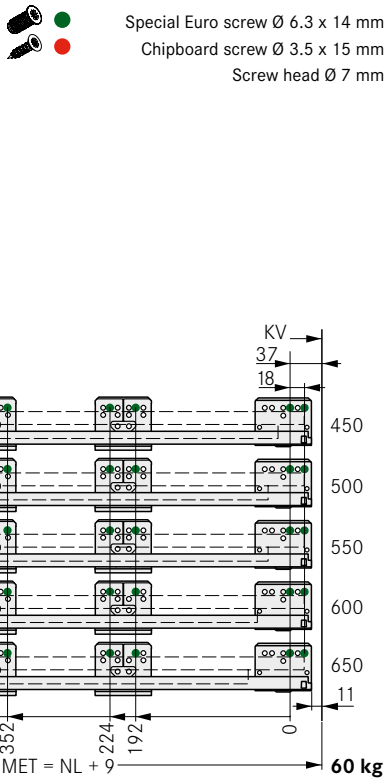


## LEGEND

| | | | | | |
|---|---|---|---|---|---|
| B | Bottom panel | KV | Front edge of cabinet | RW | Back panel |
| BB | Bottom panel width | LWK | Inside cabinet width | RWB | Width of back panel |
| FAS | Front overlay, side | MET | Minimum installation depth | RWH | Height of back panel |
| FST | Front overlay | NL | Nominal length | VAR | Can be chosen |

# DWD XP TIPMATIC

Full extension slide, 40 kg

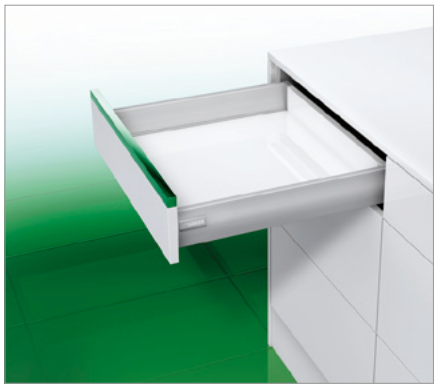

- Mechanical opening system for handle-free fronts
- Tipmatic ejector unit integrated into the slide
- Excellent running characteristics
- Fully synchronised slide technology
- Optimum opening by tapping in the middle third of the front width
- Integrated front gap adjustment + 2.0 mm
- Safety lock and transport protection
- Suitable for all DWD XP drawer sides
- Load capacity 40 kg

**Packaging unit (PU):**
123 = 100 units in PE
207 = 10 units in a cardboard box

## ORDER INFORMATION

**1 DWD XP full extension slide, 40 kg**
**Tipmatic**
**Set: One left, one right**

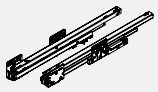

| NL | Art.-no. | PU | | | |
|---|---|---|---|---|---|
| 275 | **F091136592** | 207 | | | |
| 300 | **F091136595** | 207 | | | |
| 350 | **F091136598** | 207 | | | |
| 400 | **F091136601** | 207 | | | |
| 450 | **F091136604** | 207 | | | |
| 500 | **F091136607** | 207 | | | |
| 550 | **F091136610** | 207 | | | |

**2 Front buffer**
**Single item**

| | Art.-no. | PU | | | |
|---|---|---|---|---|---|
| | **F145068399** | 123 | | | |

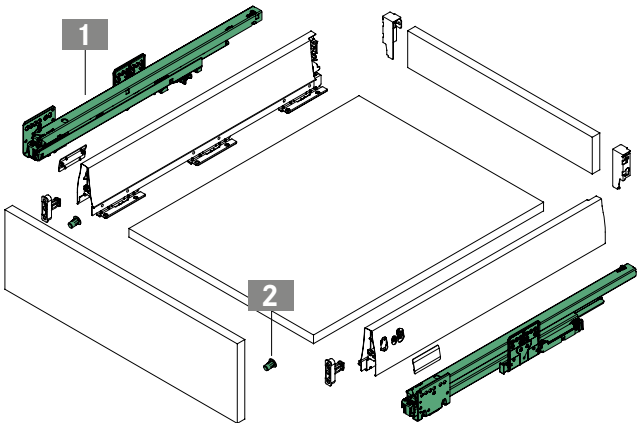


## PAGE REFERENCES


| | | | | | |
|---|---|---|---|---|---|
| Drawer sides | 11 | Application examples | 72 | Assembly technology | 124 |
| Inset panels | 34 | Technical information | 76 | Assembly aids | 128 |
| Accessories | 70 | Organising systems | 103 | Packaging code | 131 |

## INSTALLATION INFORMATION

All dimensions in millimetres

Installation dimensions

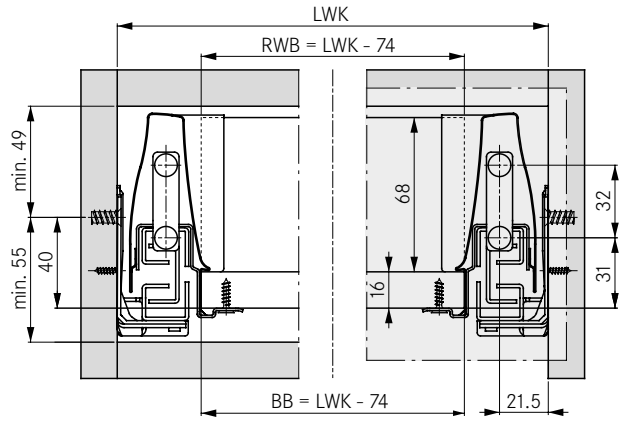


Front buffer and front gap

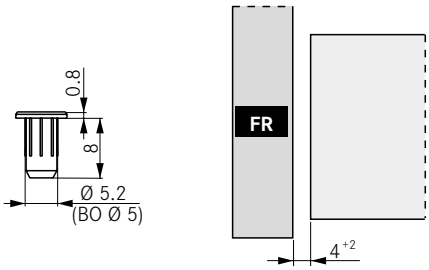


Fastening positions for full extension slide – drawer

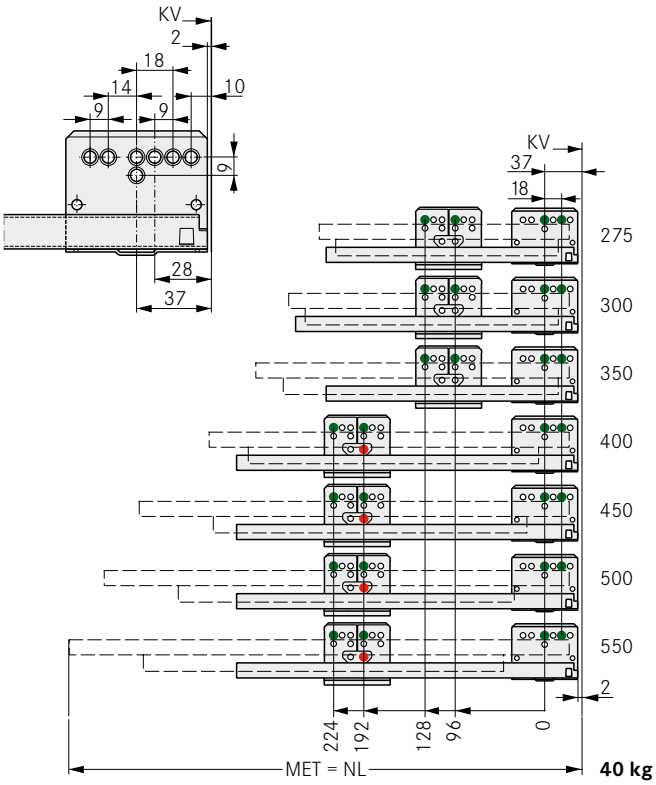


Fastening positions for full extension slide – inset drawer

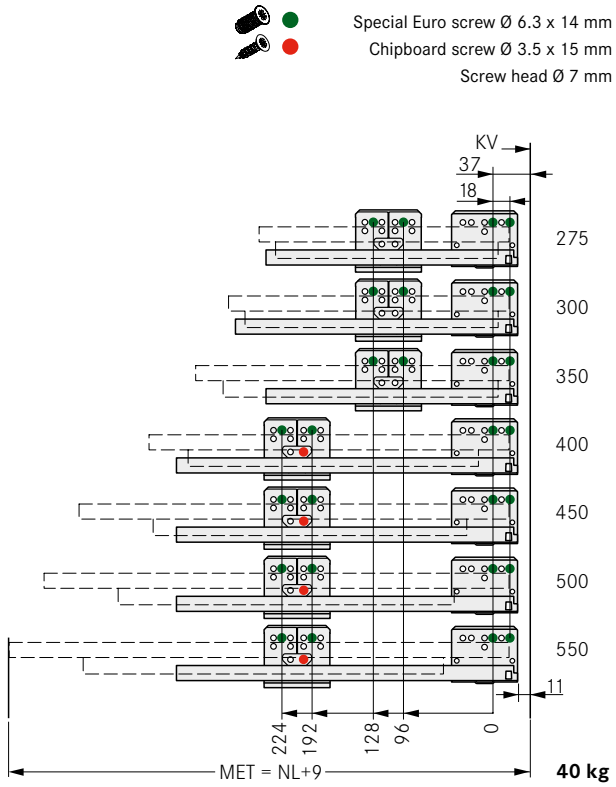


## LEGEND

| | | | | | |
|---|---|---|---|---|---|
| BB | Bottom panel width | LWK | Inside cabinet width | | |
| BO | Drill hole | MET | Minimum installation depth | | |
| FR | Front | NL | Nominal length | | |
| KV | Front edge of cabinet | RWB | Width of back panel | | |

# DWD XP TIPMATIC

Full extension slide, 60 kg

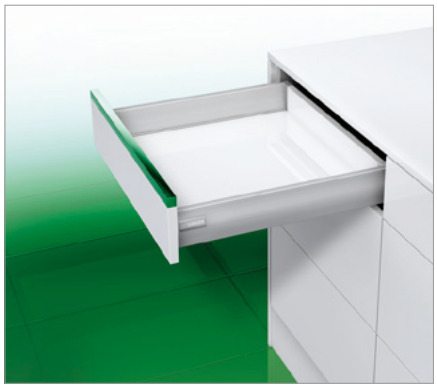

- Mechanical opening system for handle-free fronts
- Tipmatic ejector unit integrated into the slide
- Excellent running characteristics
- Fully synchronised slide technology
- Optimum opening by tapping in the middle third of the front width
- Integrated front gap adjustment + 2.0 mm
- Safety lock and transport protection
- Suitable for all DWD XP drawer sides
- Load capacity 60 kg

**Packaging unit (PU):**
123 = 100 units in PE
207 = 10 units in a cardboard box

## ORDER INFORMATION

**1 DWD XP full extension slide, 60 kg**
**Tipmatic**
**Set: One left, one right**

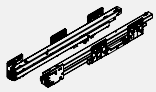

| NL | Art.-no. | PU | | | |
|---|---|---|---|---|---|
| 500 | **F091136613** | 207 | | | |
| 550 | **F091136616** | 207 | | | |
| 600 | **F091136619** | 207 | | | |
| 650 | **F091136622** | 207 | | | |

**2 Front buffer**
**Single item**

| | Art.-no. | PU | | | |
|---|---|---|---|---|---|
| | **F145068399** | 123 | | | |

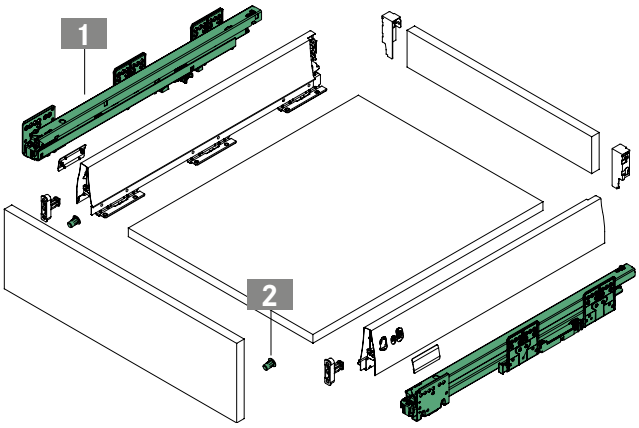


## PAGE REFERENCES


| | | | | | |
|---|---|---|---|---|---|
| Drawer sides | 11 | Application examples | 72 | Assembly technology | 124 |
| Inset panels | 34 | Technical information | 76 | Assembly aids | 128 |
| Accessories | 70 | Organising systems | 103 | Packaging code | 131 |

## INSTALLATION INFORMATION

All dimensions in millimetres

### Installation dimensions

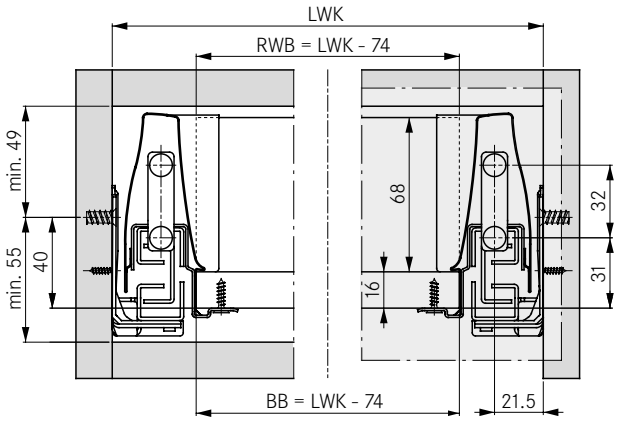


### Front buffer and front gap

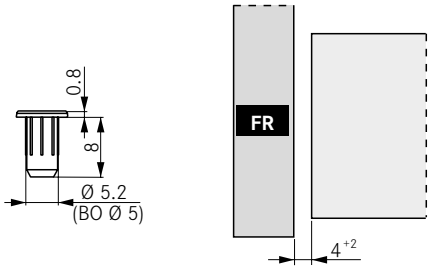


### Fastening positions for full extension slide – drawer

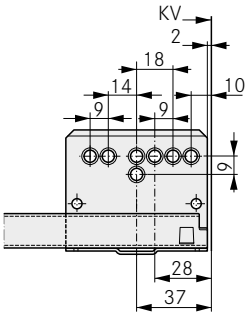


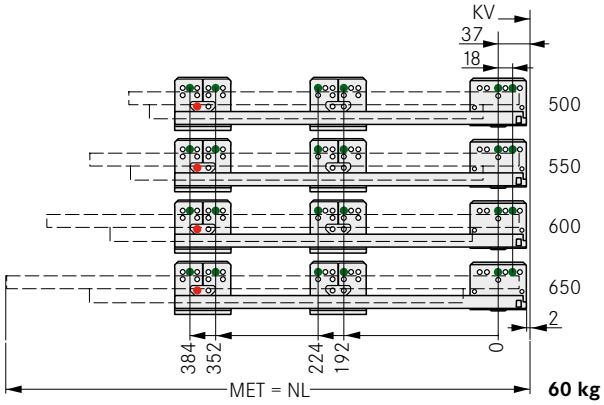


### Fastening positions for full extension slide – inset drawer

Special Euro screw Ø 6.3 x 14 mm
Chipboard screw Ø 3.5 x 15 mm
Screw head Ø 7 mm

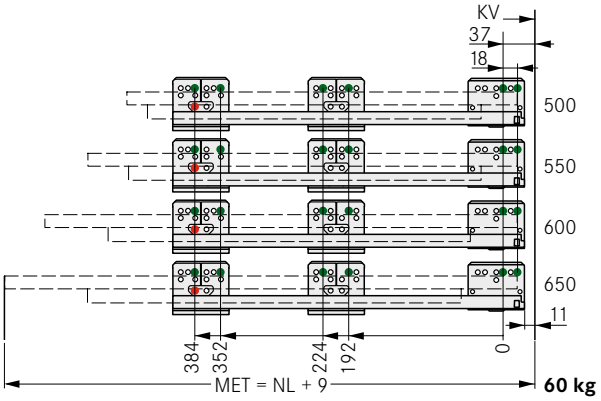


## LEGEND

| | | | | |
|---|---|---|---|---|
| BB | Bottom panel width | LWK | Inside cabinet width | |
| BO | Drill hole | MET | Minimum installation depth | |
| FR | Front | NL | Nominal length | |
| KV | Front edge of cabinet | RWB | Width of back panel | |

# DWD XP

## Drawer H95 - flat pack

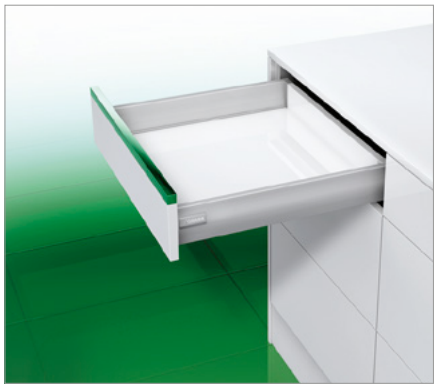

- Flat-pack set packaging
- All GRASS components for one drawer in one package
- All parts clearly arranged and immediately at hand
- The small volume of the package saves storage space

**Packaging unit (PU):**
201 = 1 unit in a cardboard box

## ORDER INFORMATION

**1 DWD XP drawer H95**
**Set: Drawer side H95 incl. cover cap, slide (Soft-close, 40 kg), clip H86 for wooden back panel and front holder, one left, one right**

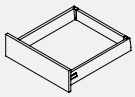

| NL | Aluminium metallic | | | | White | | | | Stone | | | | | | | |
|---|---|---|---|---|---|---|---|---|---|---|---|---|---|---|---|---|
| | Art.-no. | PU | | | Art.-no. | PU | | | Art.-no. | PU | | | | | | |
| 275 | F090075391 | 201 | | | F090115141 | 201 | | | F090136266 | 201 | | | | | | |
| 300 | F090135151 | 201 | | | F090135153 | 201 | | | F090136267 | 201 | | | | | | |
| 350 | F090075393 | 201 | | | F090115142 | 201 | | | F090136268 | 201 | | | | | | |
| 400 | F090075395 | 201 | | | F090075396 | 201 | | | F090136269 | 201 | | | | | | |
| 450 | F090075398 | 201 | | | F090075399 | 201 | | | F090136270 | 201 | | | | | | |
| 500 | F090075401 | 201 | | | F090075402 | 201 | | | F090136271 | 201 | | | | | | |
| 550 | F090075404 | 201 | | | F090115143 | 201 | | | F090136272 | 201 | | | | | | |
| 600 | F090135152 | 201 | | | F090116211 | 201 | | | F090136273 | 201 | | | | | | |

## PAGE REFERENCES


| | | | | | |
|---|---|---|---|---|---|
| Accessories | 70 | Sensomatic | 81 | Assembly aids | 128 |
| Application examples | 72 | Organising systems | 103 | Packaging code | 131 |
| Technical information | 76 | Assembly technology | 124 | | |

## INSTALLATION INFORMATION

All dimensions in millimetres

### Installation dimensions

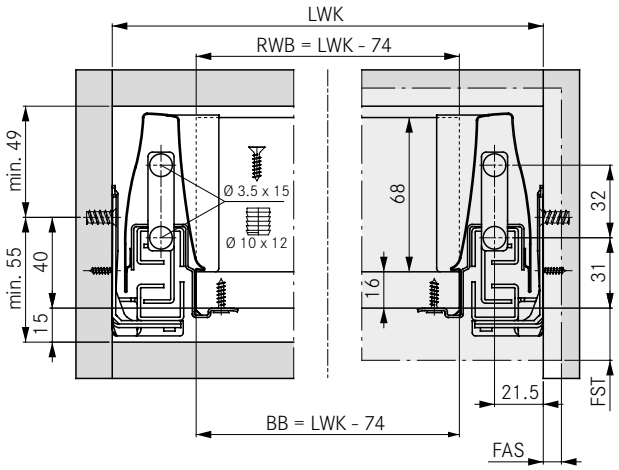


### Cutting dimensions for 16 mm chipboard

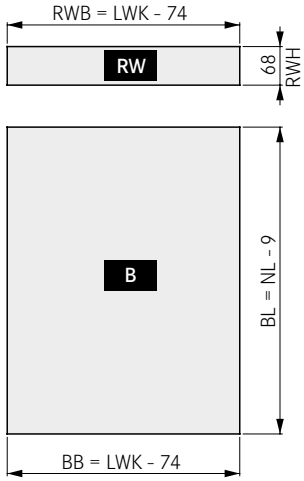


### Exploded view drawing

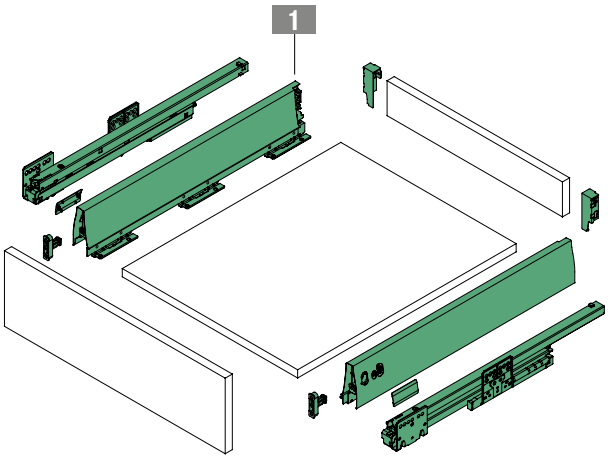


### Fixing positions for full extension drawer

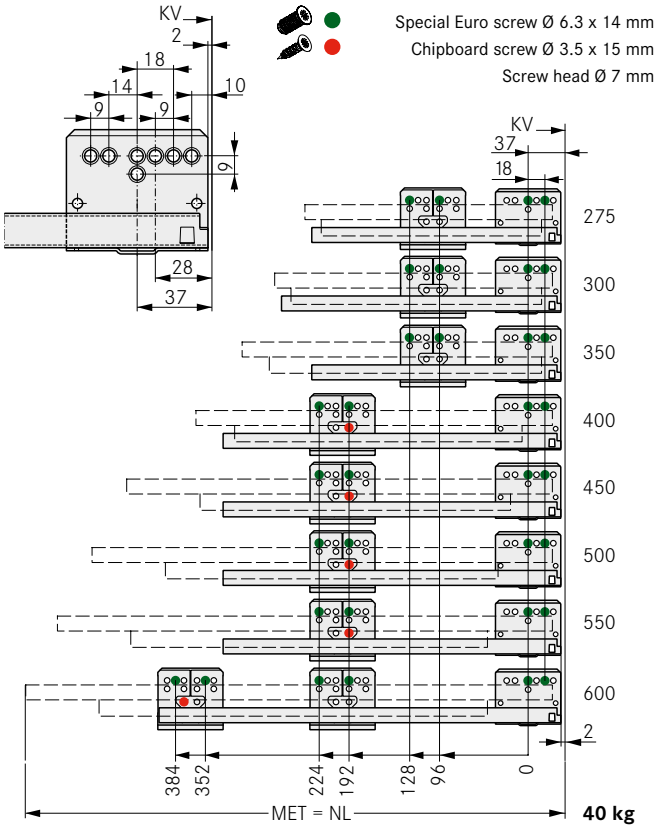


**Note:** Full extension slide, 60 kg, see Slides section (from page 52)

## LEGEND

| | | | | | |
|---|---|---|---|---|---|
| B | Bottom panel | FST | Front overlay | NL | Nominal length |
| BB | Bottom panel width | KV | Front edge of cabinet | RW | Back panel |
| BL | Bottom panel length | LWK | Inside cabinet width | RWB | Width of back panel |
| FAS | Front overlay, side | MET | Minimum installation depth | RWH | Height of back panel |

# DWD XP

## Pot drawer H95 with rectangular railing - flat pack

- Flat-pack set packaging
- All GRASS components for one pot drawer with rectangular railing in one package
- All parts clearly arranged and immediately at hand
- The small volume of the package saves storage space

**Packaging unit (PU):**
201 = 1 unit in a cardboard box

## ORDER INFORMATION

**1 DWD XP pot drawer H95 with rectangular railing**
**Set: Drawer side H95 incl. cover cap, slide (Soft-close, 40 kg), clip H182 for wooden back panel, front holder, railing, railing clip (front/back) and cover cap, one left, one right**

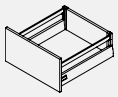

| NL | Aluminium metallic | | | | White | | | | Stone | | | | | | | |
|---|---|---|---|---|---|---|---|---|---|---|---|---|---|---|---|---|
| | Art.-no. | PU | | | Art.-no. | PU | | | Art.-no. | PU | | | | | | |
| 400 | **F090135415** | 201 | | | **F090135414** | 201 | | | **F090136278** | 201 | | | | | | |
| 450 | **F090135418** | 201 | | | **F090135417** | 201 | | | **F090136279** | 201 | | | | | | |
| 500 | **F090135421** | 201 | | | **F090135420** | 201 | | | **F090136280** | 201 | | | | | | |
| 550 | **F090135424** | 201 | | | **F090135423** | 201 | | | **F090136281** | 201 | | | | | | |

## PAGE REFERENCES


| | | | | | |
|---|---|---|---|---|---|
| Accessories | 70 | Sensomatic | 81 | Assembly aids | 128 |
| Application examples | 72 | Organising systems | 103 | Packaging code | 131 |
| Technical information | 76 | Assembly technology | 124 | | |

## PLANNING DIMENSIONS

All dimensions in millimetres

### Installation dimensions

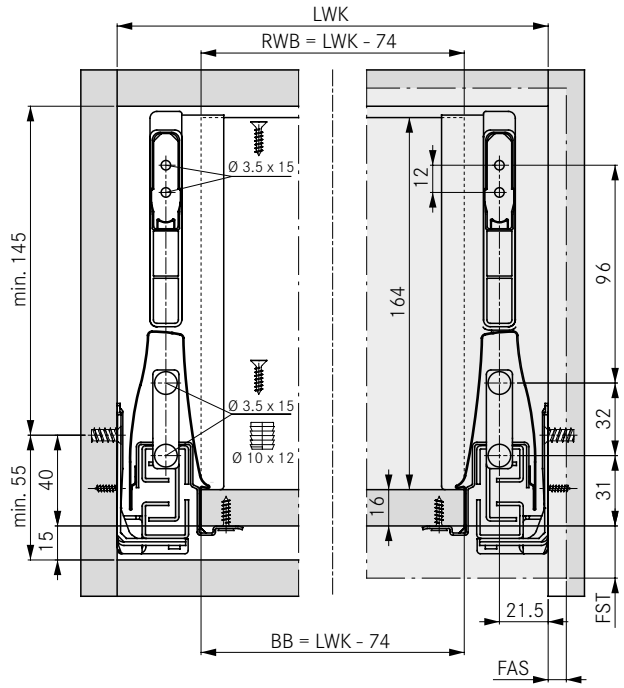


### Cutting dimensions for 16 mm chipboard

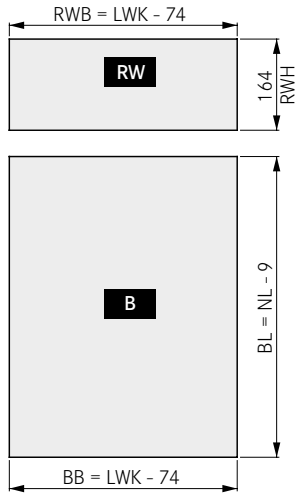


### Front tilt angle adjustment

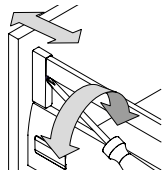

### Exploded view drawing

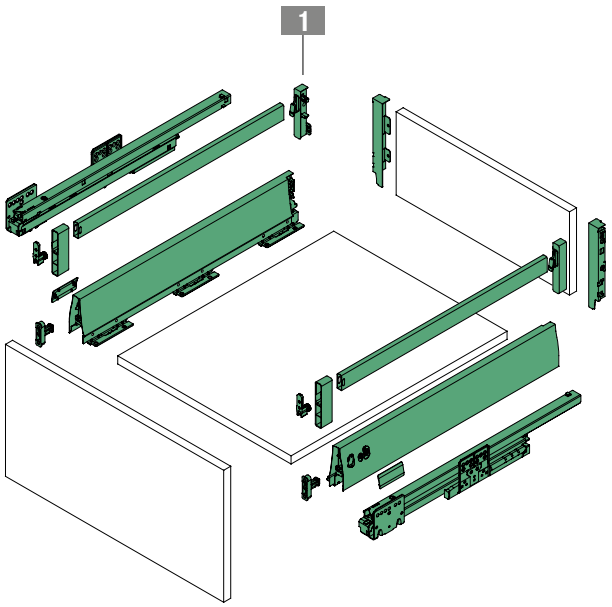


### Fixing positions for full extension drawer

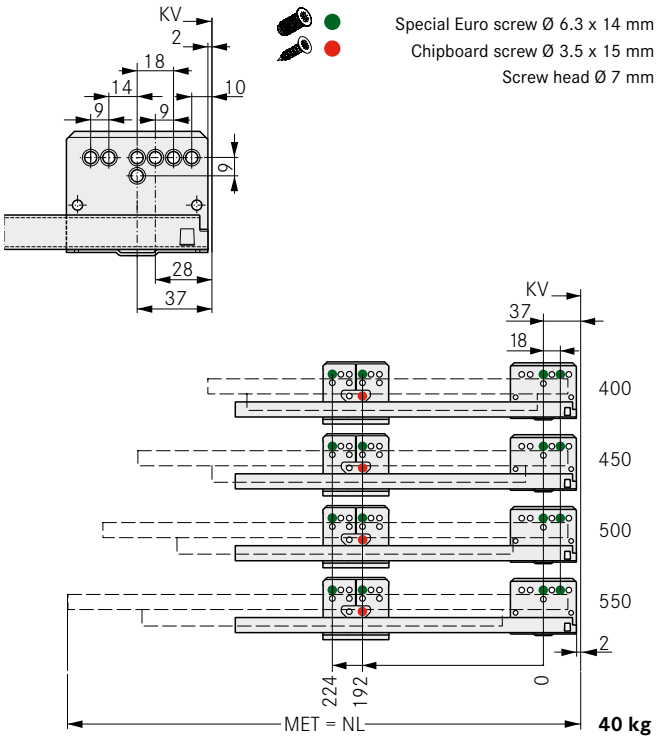


**Note:** Full extension slide, 60 kg, see Slides section (from page 52)

## LEGEND

| | | | | | |
|---|---|---|---|---|---|
| B | Bottom panel | FST | Front overlay | NL | Nominal length |
| BB | Bottom panel width | KV | Front edge of cabinet | RW | Back panel |
| BL | Bottom panel length | LWK | Inside cabinet width | RWB | Width of back panel |
| FAS | Front overlay, side | MET | Minimum installation depth | RWH | Height of back panel |

# DWD XP

## Pot drawer H95 with round railing - flat pack

- Flat-pack set packaging
- All GRASS components for one pot drawer with round railing in one package
- All parts clearly arranged and immediately at hand
- The small volume of the package saves storage space

**Packaging unit (PU):**
201 = 1 unit in a cardboard box

## ORDER INFORMATION

**1 DWD XP pot drawer H95 with round railing**
**Set: Drawer side H95 incl. cover cap, slide (Soft-close, 40 kg), clip H182 for wooden back panel, front holder, railing, railing clip (front/back) and cover cap, one left, one right**

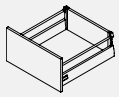

| NL | Aluminium metallic | | | | White | | | | Stone | | | | | | | |
|---|---|---|---|---|---|---|---|---|---|---|---|---|---|---|---|---|
| | Art.-no. | PU | | | Art.-no. | PU | | | Art.-no. | PU | | | | | | |
| 400 | **F090075406** | 201 | | | **F090116371** | 201 | | | **F090136274** | 201 | | | | | | |
| 450 | **F090075408** | 201 | | | **F090075409** | 201 | | | **F090136275** | 201 | | | | | | |
| 500 | **F090075410** | 201 | | | **F090075411** | 201 | | | **F090136276** | 201 | | | | | | |
| 550 | **F090075413** | 201 | | | **F090116372** | 201 | | | **F090136277** | 201 | | | | | | |

## PAGE REFERENCES


| | | | | | |
|---|---|---|---|---|---|
| Add-on systems | 64 | Technical information | 76 | Assembly technology | 124 |
| Accessories | 70 | Sensomatic | 81 | Assembly aids | 128 |
| Application examples | 72 | Organising systems | 103 | Packaging code | 131 |

## INSTALLATION INFORMATION

All dimensions in millimetres

Installation dimensions

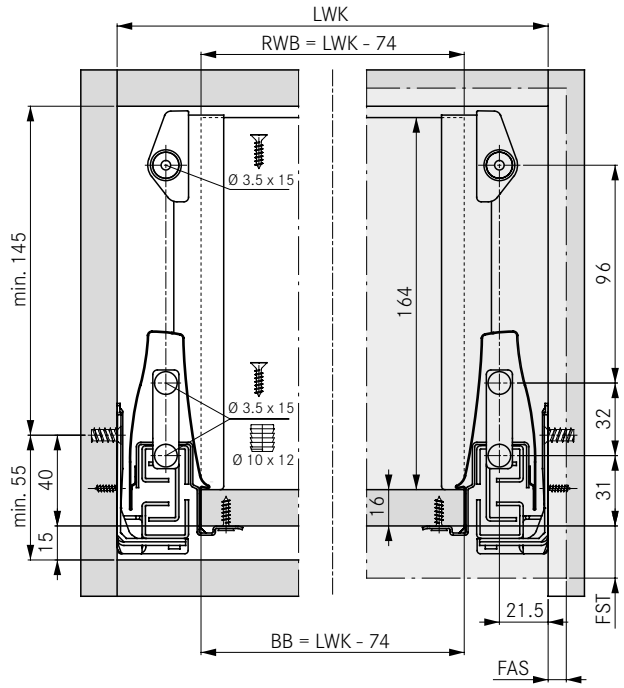


Cutting dimensions for 16 mm chipboard

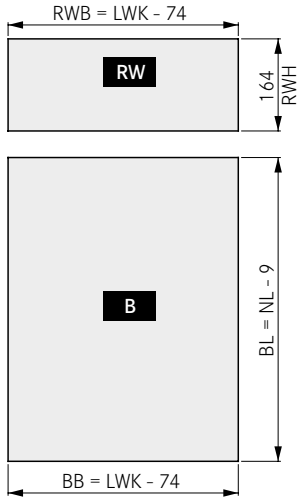


Front tilt angle adjustment

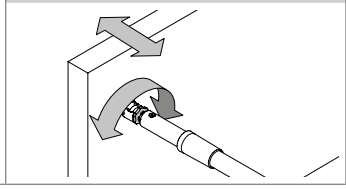

Screw-on installation of railing

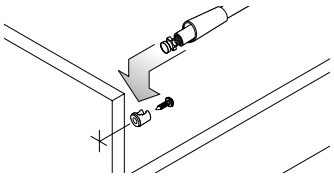

Exploded view drawing

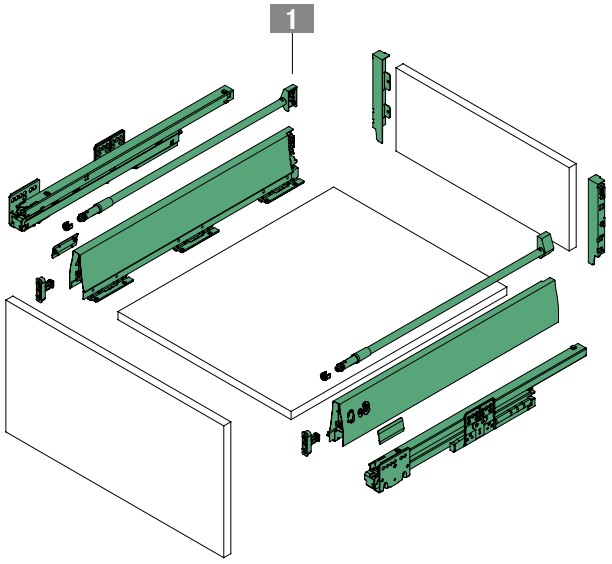


Fixing positions for full extension drawer

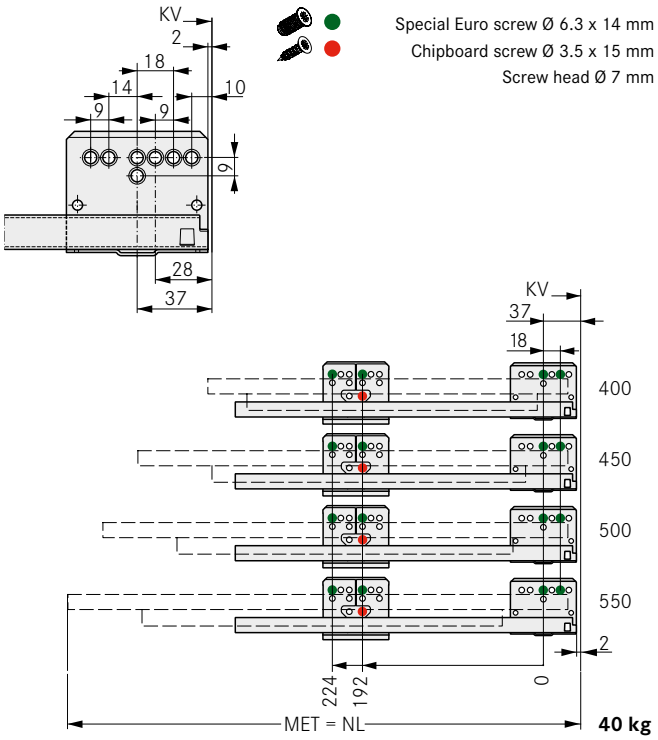


**Note:** Full extension slide, 60 kg, see Slides section (from page 52)

## LEGEND

| | | | | | |
|---|---|---|---|---|---|
| B | Bottom panel | FST | Front overlay | NL | Nominal length |
| BB | Bottom panel width | KV | Front edge of cabinet | RW | Back panel |
| BL | Bottom panel length | LWK | Inside cabinet width | RWB | Width of back panel |
| FAS | Front overlay, side | MET | Minimum installation depth | RWH | Height of back panel |

# DWD XP ADD-ON SYSTEMS

## Variowing

- Elegant add-on system for round railing
- Individual design by using different materials as inserts, such as glass or plastic
- Easy installation without tools
- Can be complemented by the Magic Optima dividing system
- Suitable for 4 mm slide-in elements
- Acrylic glass set available

**Packaging unit (PU):**
511 = 20 units in PE in a cardboard box
517 = 50 units in PE in a cardboard box

## ORDER INFORMATION

**1 Variowing set**
**Acrylic glass and clip (front/back), one left, one right**

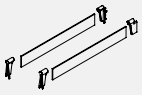

| NL | Aluminium metallic | | White | | Stone | |
|---|---|---|---|---|---|---|
| | Art.-no. | PU | Art.-no. | PU | Art.-no. | PU |
| 500 | **F092082604** | 511 | **F092077402** | 511 | **F092136348** | 511 |
| 550 | **F092082606** | 511 | **F092077403** | 511 | **F092136349** | 511 |
| 650 | **F092082607** | 511 | **F092079041** | 511 | **F092136350** | 511 |

**2 Variowing clip**
**Set: Clip (front/back), one left, one right**

| | Aluminium metallic | | White | | Stone | |
|---|---|---|---|---|---|---|
| | Art.-no. | PU | Art.-no. | PU | Art.-no. | PU |
| | **F092082588** | 517 | **F092076843** | 517 | **F092136347** | 517 |

**3 Round screw-on railing**
**see page 22**

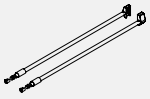

**4 Round quick-mounting railing**
**see page 26**

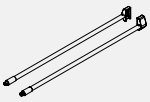

**5 DWD XP drawer sides H95, clip H182 for wooden back panel and front holder** **see page 22**

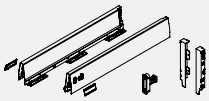

## PAGE REFERENCES


| | | | | | |
|---|---|---|---|---|---|
| Drawer sides | 11 | Flat packs | 58 | Technical information | 76 |
| Inset panels | 34 | Accessories | 70 | Sensomatic | 81 |
| Slides | 50 | Application examples | 72 | Organising systems | 103 |

## INSTALLATION INFORMATION

All dimensions in millimetres

### Installation dimensions

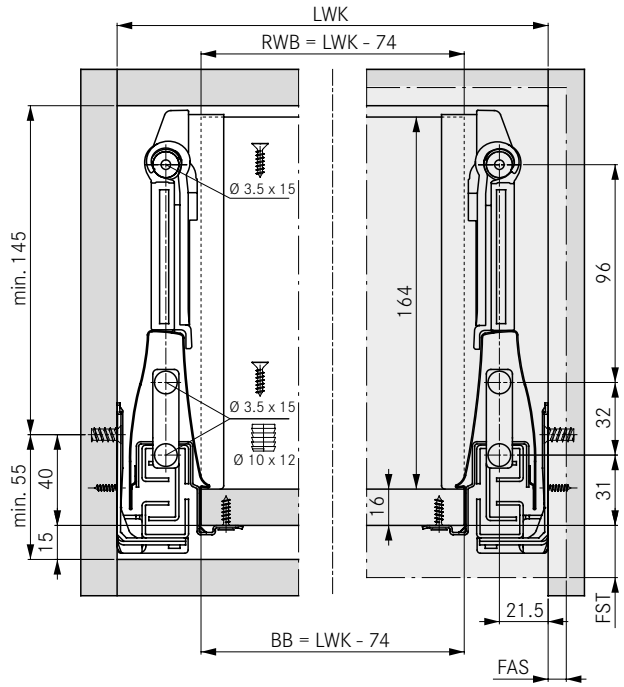


### Cutting dimensions for 16 mm chipboard

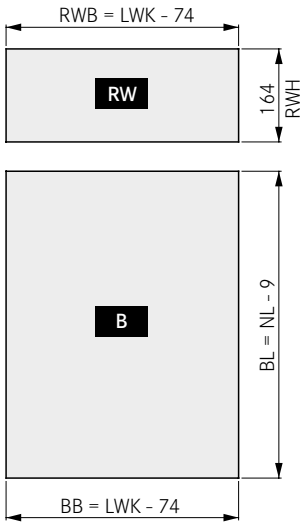


### Glass cutting dim.

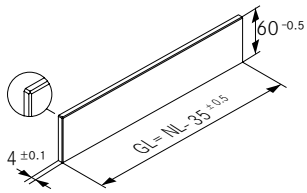


| NL | GL |
|---|---|
| 350 | 315 |
| 400 | 365 |
| 450 | 415 |
| 500 | 465 |
| 550 | 515 |
| 600 | 565 |
| 650 | 615 |

### Front tilt angle adjustment

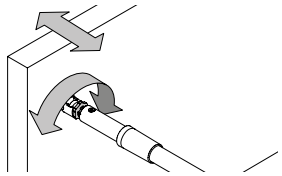

### Note

All glass edges must be chamfered (approx. 0.7 mm x 45°).
GRASS recommends TSG.*
*(toughened safety glass)

### Exploded view drawing

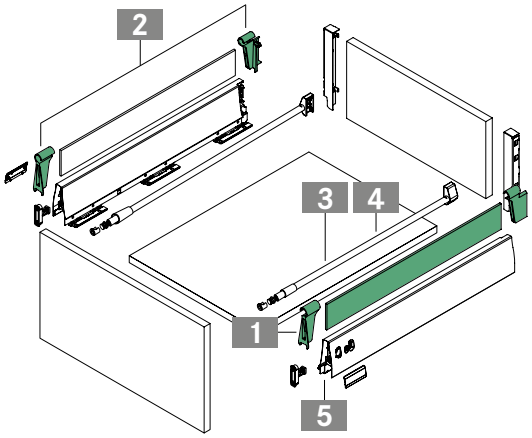


### Fixing positions for full extension drawer

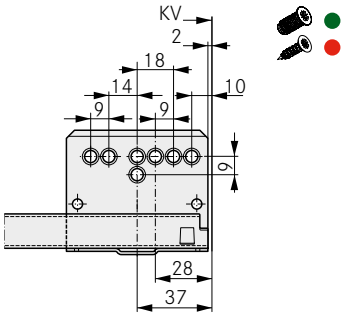


Special Euro screw Ø 6.3 x 14 mm
Chipboard screw Ø 3.5 x 15 mm
Screw head Ø 7 mm

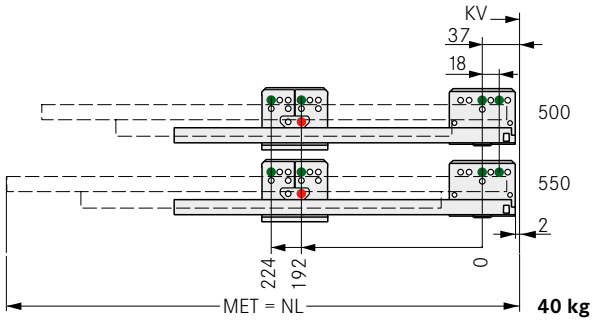


**Note:** Full extension slide, 60 kg, see Slides section (from page 48)

## LEGEND

| | | | | | |
|---|---|---|---|---|---|
| BB | Bottom panel width | GL | Glass length | NL | Nominal length |
| BL | Bottom panel length | KV | Front edge of cabinet | RW | Back panel |
| FAS | Front overlay, side | LWK | Inside cabinet width | RWB | Width of back panel |
| FST | Front overlay | MET | Minimum installation depth | RWH | Height of back panel |

# DWD XP ADD-ON SYSTEMS

Duowing

- High-quality, double-wall add-on system for round railing
- Optimally matched to drawer side design
- Available in 2 colours
- Easy installation without tools
- Can be complemented by the Magic Optima and Magic Classic dividing systems

**Packaging unit (PU):**
201 = 1 unit in a cardboard box
207 = 10 units in a cardboard box

## ORDER INFORMATION

**1 Duowing set**
**Duowing and clip, one left, one right**

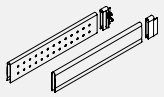

| NL | Aluminium metallic | | | | White | | | | Stone | | | | | | | |
|---|---|---|---|---|---|---|---|---|---|---|---|---|---|---|---|---|
| | Art.-no. | PU | | | Art.-no. | PU | | | Art.-no. | PU | | | | | | |
| 400 | **F092082567** | 201 | 207 | | **F092082583** | 201 | | | **F092136351** | 201 | | | | | | |
| 450 | **F092082570** | 201 | 207 | | **F092082584** | 201 | | | **F092136352** | 201 | | | | | | |
| 500 | **F092082572** | 201 | 207 | | **F092082585** | 201 | | | **F092136353** | 201 | | | | | | |
| 550 | **F092082576** | 201 | 207 | | **F092082586** | 201 | | | **F092136354** | 201 | | | | | | |
| 600 | **F092082578** | 201 | 207 | | **F092071889** | 201 | | | **F092136355** | 201 | | | | | | |
| 650 | **F092082580** | 201 | 207 | | **F092077404** | 201 | | | **F092136356** | 201 | | | | | | |

**2 Round screw-on railing**
**see page 22**

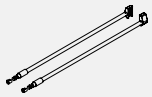

**3 Round quick-mounting railing**
**see page 26**

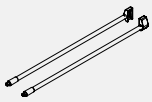

**4 DWD XP drawer sides H95, clip H182 for wooden back panel and front holder** **see page 22**

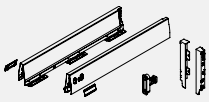

## PAGE REFERENCES


| | | | | | |
|---|---|---|---|---|---|
| Drawer sides | 11 | Flat packs | 58 | Technical information | 76 |
| Inset panels | 34 | Accessories | 70 | Sensomatic | 81 |
| Slides | 50 | Application examples | 72 | Organising systems | 103 |

## PLANNING DIMENSIONS

All dimensions in millimetres

### Installation dimensions

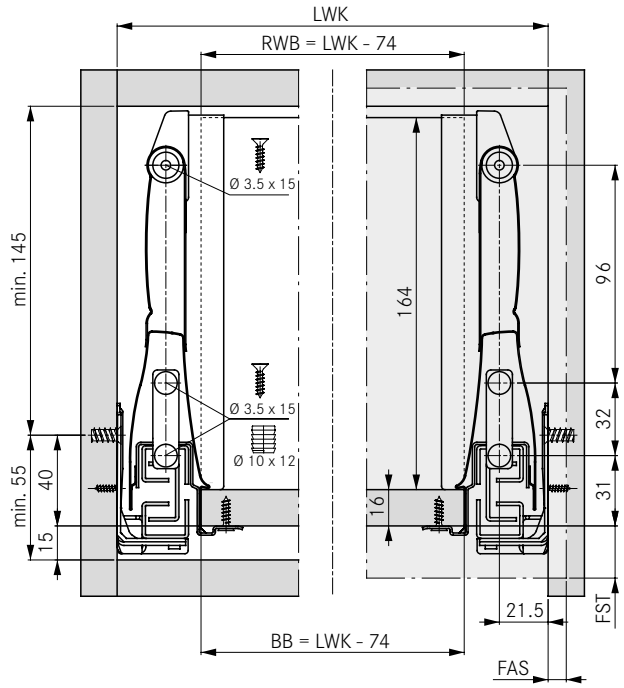


### Cutting dimensions for 16 mm chipboard

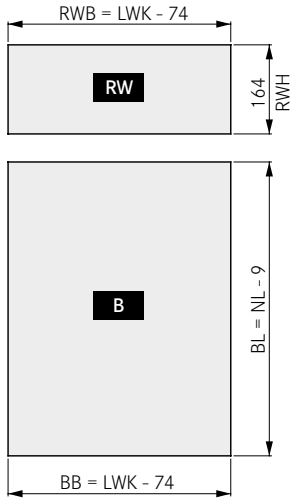


### Front tilt angle adjustment

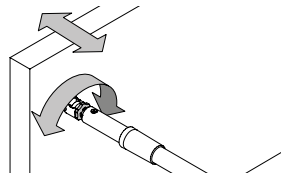

### Exploded view drawing

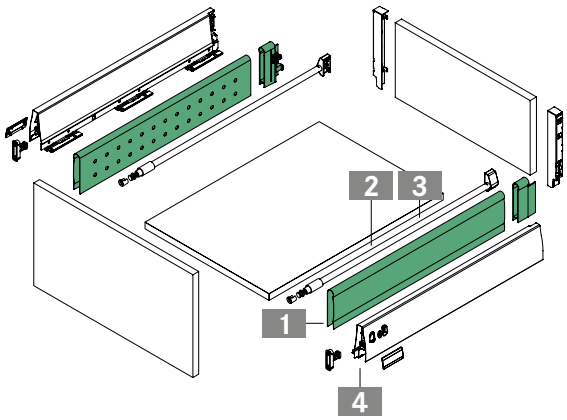


### Fixing positions for full extension drawer

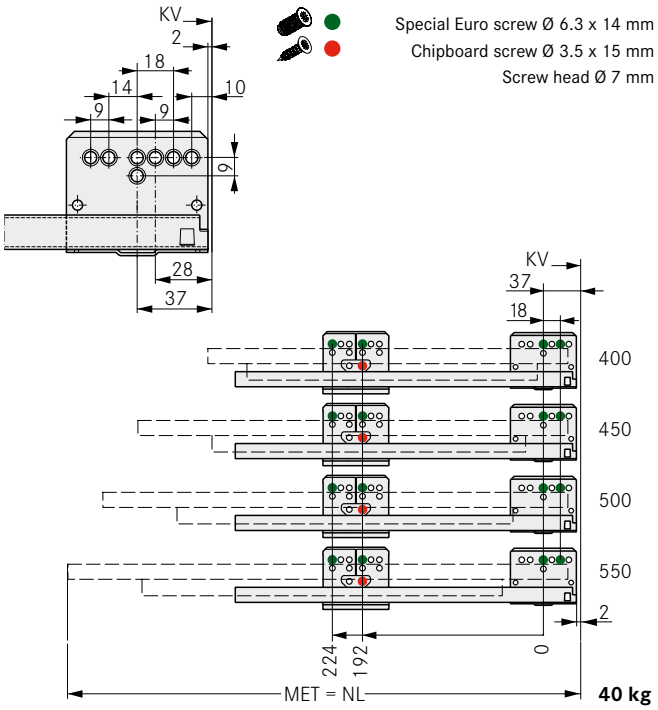


**Note:** Full extension slide, 60 kg, see Slides section (from page 48)

## LEGEND

| | | | | | |
|---|---|---|---|---|---|
| B | Bottom panel | FST | Front overlay | NL | Nominal length |
| BB | Bottom panel width | KV | Front edge of cabinet | RW | Back panel |
| BL | Bottom panel length | LWK | Inside cabinet width | RWB | Width of back panel |
| FAS | Front overlay, side | MET | Minimum installation depth | RWH | Height of back panel |

# DWD XP

## Suspension file drawer with oval railing

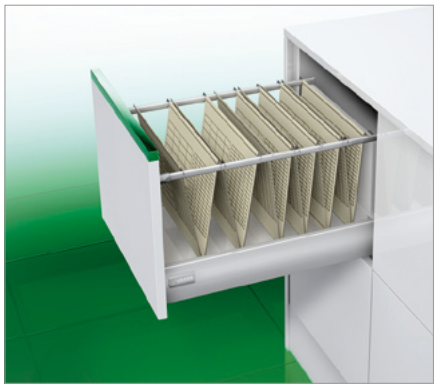

- Oval, natural anodised aluminium tube with high bending resistance
- Secure screw connection at front and back panels ensures stable construction and high load capacity
- Tool-free tilt angle adjustment using the oval railing

**Packaging unit (PU):**
223 = 100 units in a cardboard box
233 = 200 units in a cardboard box
511 = 20 units in PE in a cardboard box

## ORDER INFORMATION

**1 Oval screw-on railing for suspension files**
**Set: One left, one right**

| NL | Aluminium anodised | |
|---|---|---|
| | Art.-no. | PU |
| 450 | **F084074848** | 233 |
| 500 | **F084074850** | 511 |
| 550 | **F084074851** | 511 |

**2 Clip for variable wooden back panel**
**Set: One left, one right**

| | Aluminium metallic | | White | | Stone | |
|---|---|---|---|---|---|---|
| | Art.-no. | PU | Art.-no. | PU | Art.-no. | PU |
| | **F092082978** | 223 | **F092115414** | 223 | **F092136293** | 223 |

**3 DWD XP drawer sides H95 and front holder see page 16**

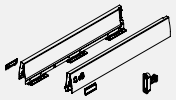

## PAGE REFERENCES


| | | | | | |
|---|---|---|---|---|---|
| Drawer sides | 11 | Application examples | 72 | Organising systems | 103 |
| Slides | 50 | Technical information | 76 | Assembly technology | 124 |
| Accessories | 70 | Sensomatic | 81 | Assembly aids | 128 |

## INSTALLATION INFORMATION

All dimensions in millimetres

Installation dimensions for DWD XP drawer sides H95

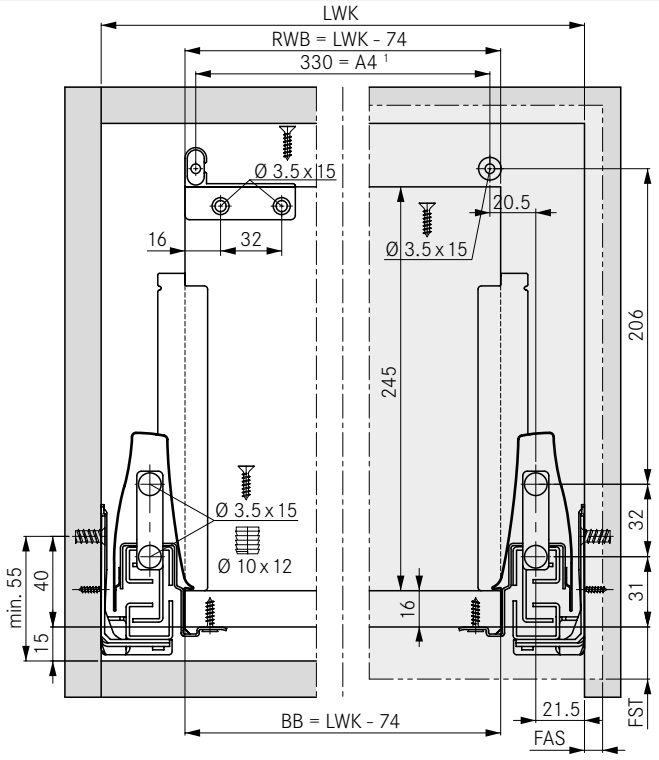


[1] For A4 suspension files (RWB = 340)

Cutting dimensions for 16 mm chipboard

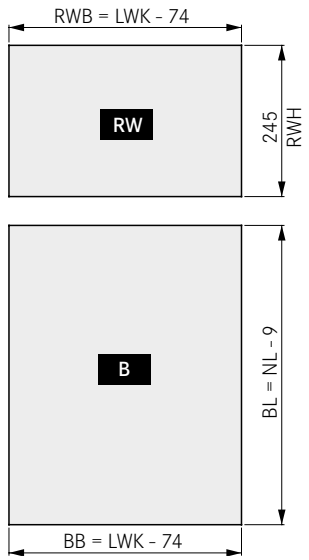


Front tilt angle adjustment

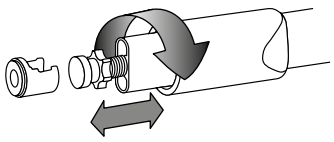

Exploded view drawing

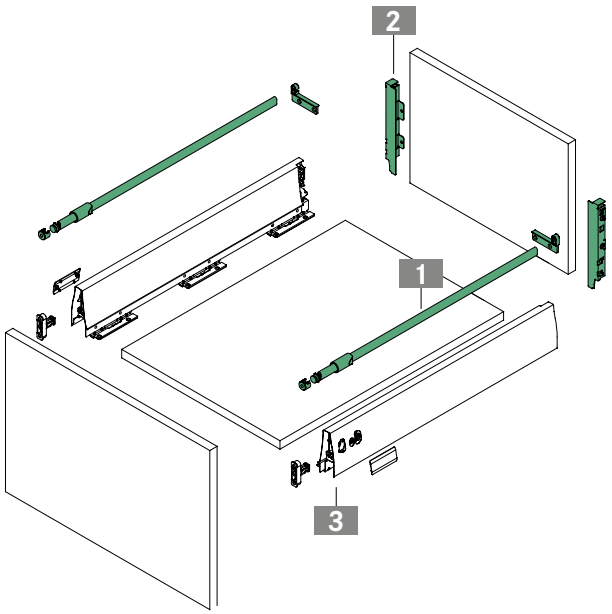


Fixing positions for full extension drawer

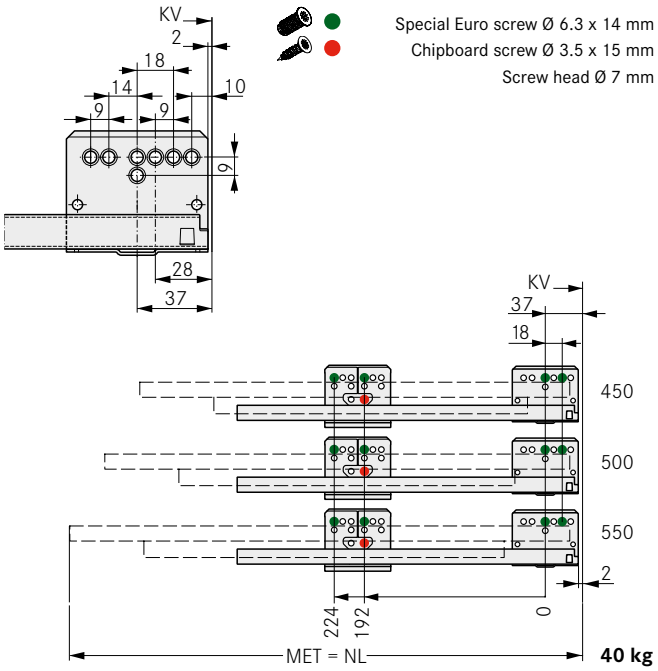


**Note:** Full extension slide, 60 kg, see Slides section (from page 48)

## LEGEND

| | | | | | |
|---|---|---|---|---|---|
| B | Bottom panel | FST | Front overlay | NL | Nominal length |
| BB | Bottom panel width | KV | Front edge of cabinet | RW | Back panel |
| BL | Bottom panel length | LWK | Inside cabinet width | RWB | Width of back panel |
| FAS | Front overlay, side | MET | Minimum installation depth | RWH | Height of back panel |

## FRONT-BOTTOM CONNECTOR

| | | | Art.-no. | PU |
|---|---|---|---|---|
| • For wide drawers from a cabinet width of 800 mm | | 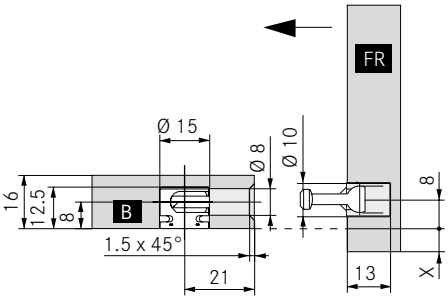  | **F148**026**744** | 223 |

## FRONT-BOTTOM CONNECTOR F8 INSET PANEL

| | | | | Art.-no. | PU |
|---|---|---|---|---|---|
| • For wide drawers from a cabinet width of 600 mm | | KB = 600 - 800 mm | 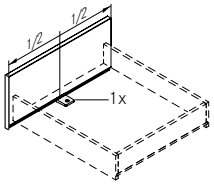  | **F145**117**993** | 223 |
| | | KB = 800 - 1200 mm | 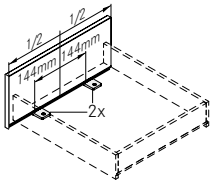  | | |

## DWD XP SPACER 25 MM

| | | | Art.-no. | PU |
|---|---|---|---|---|
| • For inset drawers behind the door in order to bridge door protrusion<br>• Suitable for left and right<br>• Secure fastening of DWD XP full extension drawers with 40 kg load capacity | | 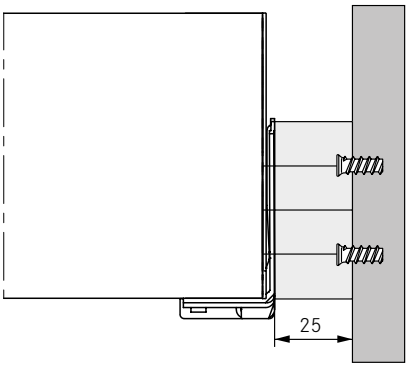  | **F092**083**198** | 217 |

## PAGE REFERENCES


| | | | | | |
|---|---|---|---|---|---|
| Drawer sides | 11 | Flat packs | 58 | Sensomatic | 81 |
| Inset panels | 34 | Add-on systems | 64 | Organising systems | 103 |
| Slides | 50 | Technical information | 76 | Assembly technology | 124 |

## DWD XP CHILD LOCK

| | | Art.-no. | PU |
|---|---|---|---|
| • When activated, limits the opening of the drawer to a small gap; the drawer opens fully when a concealed lever at the base is operated<br>• The concealed installation avoids imitation of the action by the child<br>• Use of the drawer storage space is unrestricted<br>• No damage to front and cabinet<br>• Can also be retrofitted<br>• Can be deactivated without tools if needed | | F092083193 | 523 |

## DWD XP LOCKING PIN

| | | Art.-no. | PU |
|---|---|---|---|
| • For recessed locking rail in combination with HUWIL locking system SVS 3<br>• Locking pin to be inserted into the punched hole of the DWD XP drawer side in place of the DWD XP cover cap<br>• Can be fitted and removed without tools<br>• Panel remains fully adjustable<br>• Holding strength significantly higher than DIN 68852<br>• Colour: aluminium-grey<br><br>**Note:**<br>locking rails cannot be purchased from GRASS.<br>To be confirmed with HUWIL.<br>Specify the position of the locking bolt when ordering the locking rail. | | F092083203 | 107 |

## SPECIAL EURO SCREWS

| | | | Art.-no. | PU |
|---|---|---|---|---|
| • Steel, nickel-plated, for screw fixing in Ø 5 mm pre-drilled hole system (Pozidriv No. 2) | L = 8.5 | 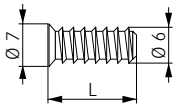  | F145089355 | 123 |
| | L = 13.5 | | F145088185 | 123 |
| | L = 10.5 | 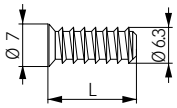  | F148115048 | 147 |
| | L = 14 | | F148115049 | 147 |

## CHIPBOARD SCREWS

| | | | Art.-no. | PU |
|---|---|---|---|---|
| • Head Ø 7 mm | L = 11 | 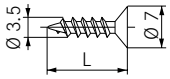  | F145010742 | 261 |
| | L = 15 | | F145087110 | 123 |
| | L = 17 | | F145087111 | 147 |

## LEGEND

| | |
|---|---|
| B | Bottom panel |
| FR | Front |
| KB | Cabinet width |
| L | Length |

# APPLICATION EXAMPLES

## Crockery cabinet and pull-out larder

- Stylish wide pull-out cabinet
- Provides lots of storage space for large bulky items
- Features inset drawers and pull-outs as well as shelves in the upper part
- Can be complemented with all add-on systems
- Can be complemented by the Magic Optima dividing system to provide optimum stability of stored items

### CROCKERY PULL-OUT CABINET

Application example consists of:

1 Inset drawer, DWD XP 40 kg

2 Inset pull-out with railing and Duowing, DWD XP 40 kg

3 Inset pull-out with railing and Duowing, DWD XP 60 kg

Recommended cabinet widths 800 – 1000 mm

### NOTE

We recommend:

Tiomos 170° wide-angle hinge with integrated Soft-close

Nexis Click-on 170° wide-angle hinge

- Soft-close compatible
- Zero protrusion

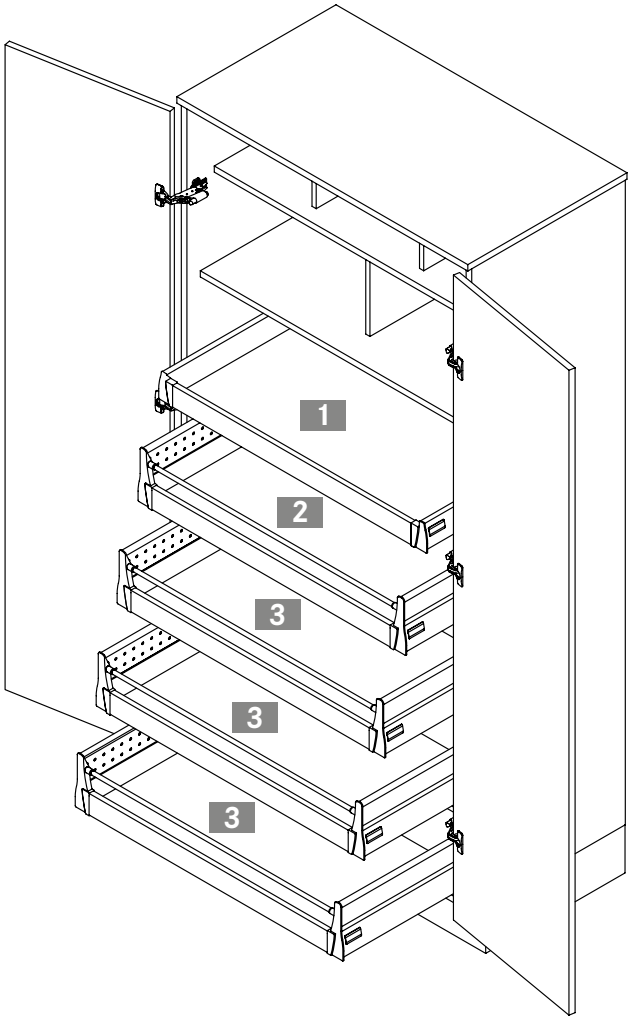


### PAGE REFERENCES


| | | | | | |
|---|---|---|---|---|---|
| Drawer sides | 11 | Add-on systems | 64 | Sensomatic | 81 |
| Inset panels | 34 | Accessories | 70 | Organising systems | 103 |
| Slides | 50 | Technical information | 76 | Assembly technology | 124 |

- The flexible and elegant solution for pull-out larders
- Top performance through freely moving inset drawers and pull-outs
- Optimal access to contents
- Can be complemented with all add-on systems
- Can be complemented by the Magic Optima dividing system to provide optimum stability of stored items

## PULL-OUT LARDER

Application example consists of:

1 Drawer H95
2 Inset pull-out with railing
3 Pot drawer with railing and Duowing
4 Inset drawer
5 Pot drawer with railing and Duowing

## NOTES

1 + 3 + 5 are attached to the front

Recommended cabinet widths 300 – 400 mm

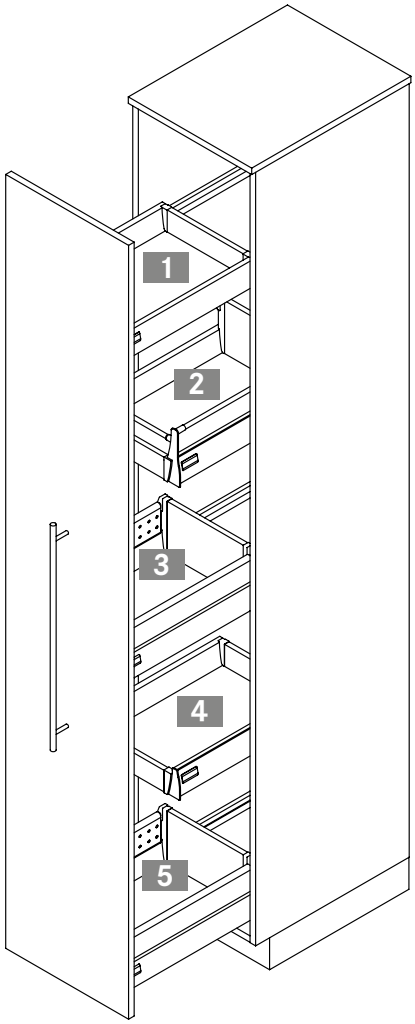


## LEGEND

# APPLICATION EXAMPLES

## Oven base drawer and spacer plate

- Oven base drawer matches DWD XP full extension drawers with 40 kg load capacity
- Ninka oven base drawer 2010 NL 500/KB 600 mm
- Elco Top Volumen, NL 500/KB 600, height 170 and 220 mm

**Packaging unit (PU):**
211 = 20 items in a cardboard box

### ORDER INFORMATION

**Suitable for DWD XP full extension drawer with Soft-close 40 kg**
**Set: One left, one right**

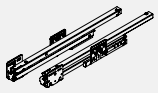

| NL | Art.-no. | PU | | | |
|---|---|---|---|---|---|
| 500 | **F091075477** | 211 | | | |

### PAGE REFERENCES


| | | | | | |
|---|---|---|---|---|---|
| Drawer sides | 11 | Add-on systems | 64 | Sensomatic | 81 |
| Inset panels | 34 | Accessories | 70 | Organising systems | 103 |
| Slides | 50 | Technical information | 76 | Assembly technology | 124 |

- Spacer, 2 mm thick, for making up the difference between S16 and S18 mm cabinet thickness
- For DWD XP full extension drawers (40 kg)

**Packaging unit (PU):**
103 = 4 items in PE

## ORDER INFORMATION

**Spacer plate, thickness 2 mm**
**Single item: Can be used on left/right**

| | Art.-no. | PU | | | |
|---|---|---|---|---|---|
| | **F092083199** | 103 | | | |

## INSTALLATION INFORMATION

All dimensions in millimetres

Installation dimensions

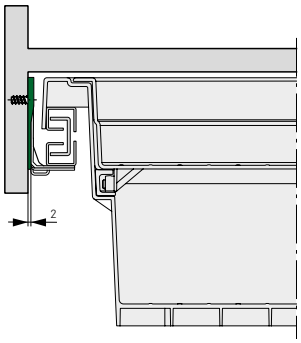


## LEGEND

| | |
|---|---|
| KB | Cabinet width |
| NL | Nominal length |
| S | Cabinet side wall |

## INSTALLATION INFORMATION

Dimensions for drawer insert H95

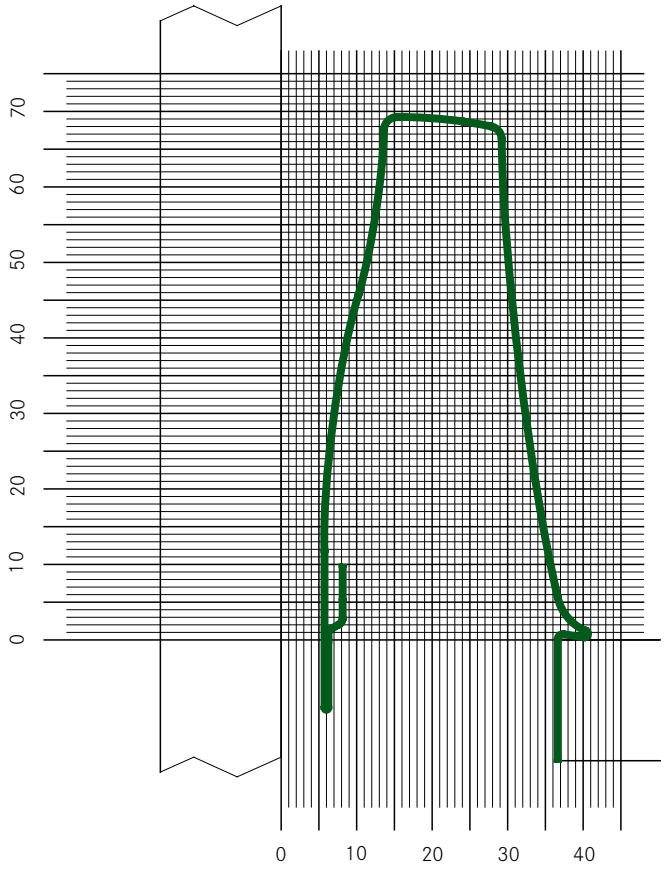


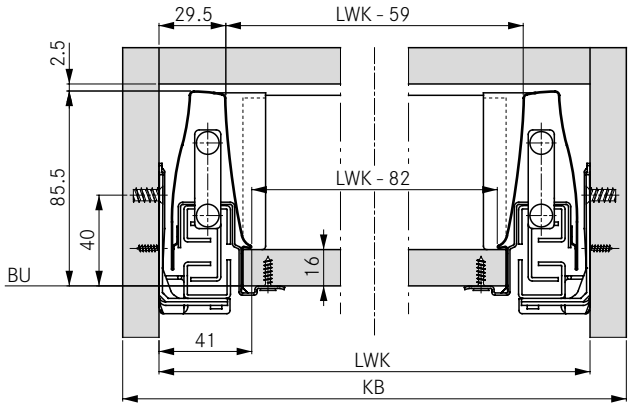


## PAGE REFERENCES


| | | | | | |
|---|---|---|---|---|---|
| Drawer sides | 11 | Accessories | 70 | Organising systems | 103 |
| Slides | 50 | Application examples | 72 | Assembly technology | 124 |
| Add-on systems | 64 | Sensomatic | 81 | Assembly aids | 128 |

## INSTALLATION ADVICE

| Front holder with press-fit dowels Ø 10 x 12 mm | Front holder with expansion dowels Ø 10 x 12 mm |
|---|---|
| The holes for fixing should be countersunk. The sharp edges of the holes of hard surface coatings such as melamine can damage the dowels during press fitting. This can lead to significantly reduced pull-out force. 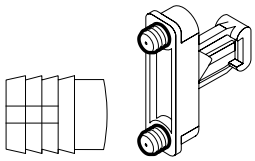 | Alternatively it is possible to use front holders with expansion dowels, which do not require countersinking and still guarantee optimum pull-out force. 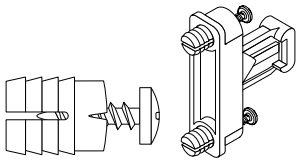 |

## ADJUSTMENTS

| Eccentric height adjustment on both sides | |
|---|---|
| Release locking screws on both sides. 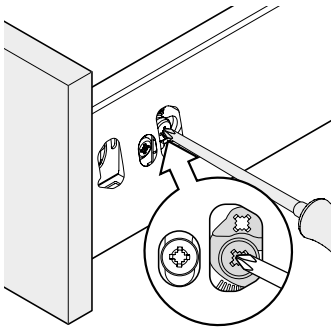 | Adjust front panel and re-tighten locking screws. 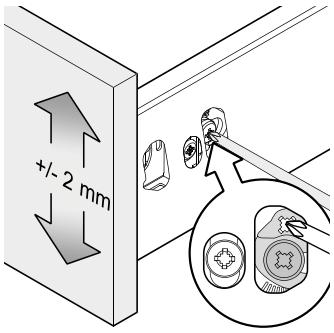  |
| **Side adjustment, right** | |
| Turn adjustment. Only the right-hand side has to be operated due to the integrated lateral adjustment. 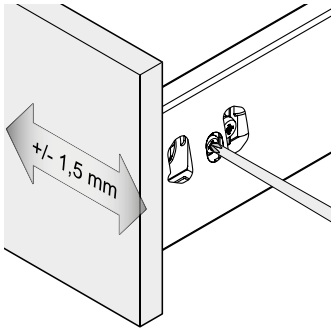  | |
| **Front tilt angle adjustment** | |
| With rectangular railings, tilt angle adjustment of the front is via the front panel holder. 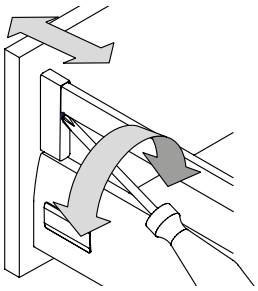 | The tilt angle adjustment of the front with a round railing is carried out by turning the adjustment screw. 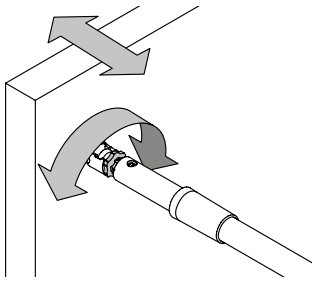 |

## LEGEND

| | |
|---|---|
| BU | Bottom edge |
| KB | Cabinet width |
| LWK | Inside cabinet width |

## MOUNTING/DISMOUNTING

### Inserting the drawer

Place the drawer on the extended slides.

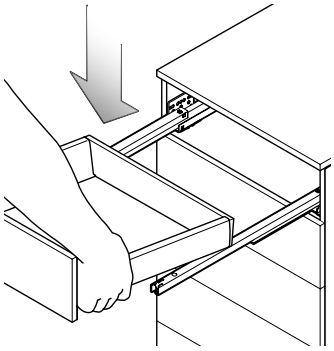

Slightly lift the drawer at the front and then push fully closed.
**The drawer engages automatically!**

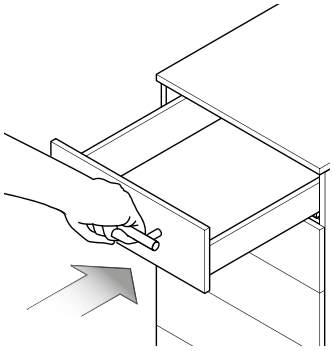

### Removing the drawer

Pull the drawer out, lift slightly approx. 10 cm before the limit stop.

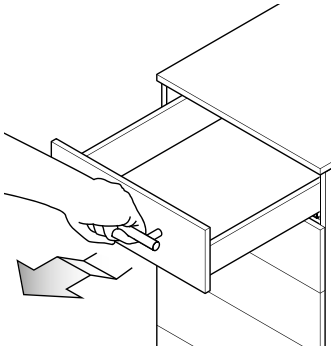

Pull firmly **horizontally** until the drawer audibly disengages, then lift off.

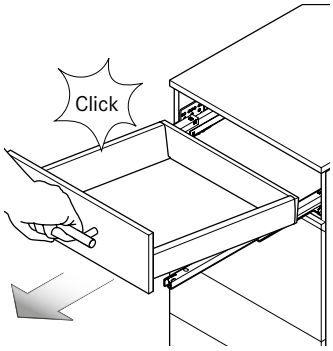


### Front panel installation

Insert the front panel clip into the drawer sides. The front panel engages automatically and is fixed.

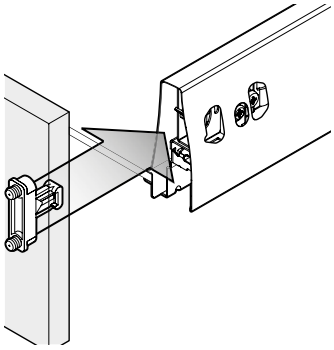

### Removing the front panel

Use Pozidriv No. 2 to release.

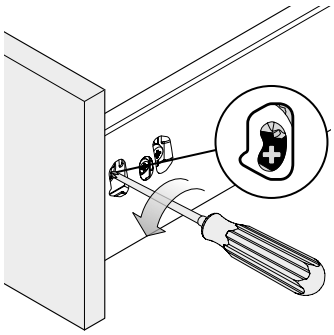

The front panel is now released and can be removed.
**Where a front-bottom connector is used, release the connector!**

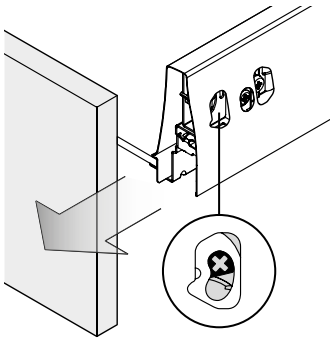

## PAGE REFERENCES


| | | | | | |
|---|---|---|---|---|---|
| Drawer sides | 11 | Accessories | 70 | Organising systems | 103 |
| Slides | 50 | Application examples | 72 | Assembly technology | 124 |
| Add-on systems | 64 | Sensomatic | 81 | Assembly aids | 128 |

## TEST CRITERIA FOR DRAWERS

| | | |
|---|---|---|
| **Durability test** | | |
| 100,000 open and close movements | 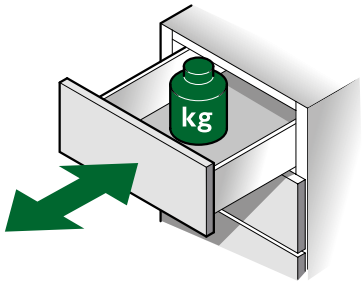 | 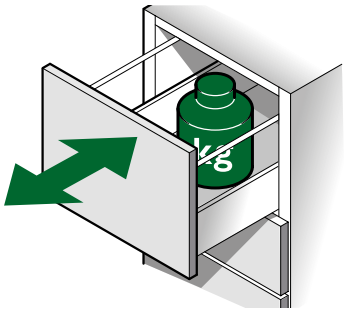 |
| **Static vertical overload test** | | |
| 10 times 10 seconds in a fully open condition, additional corner load 300 N | 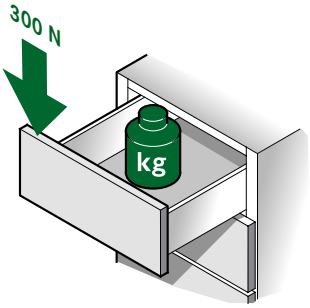 | 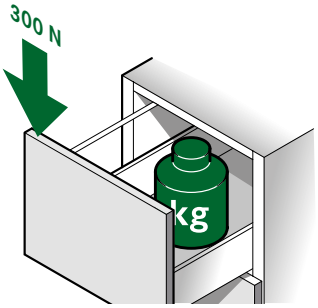 |
| **Static horizontal overload test** | | |
| 5 x 10 seconds, full extended, right/left alternating, additional load on front 150 N | 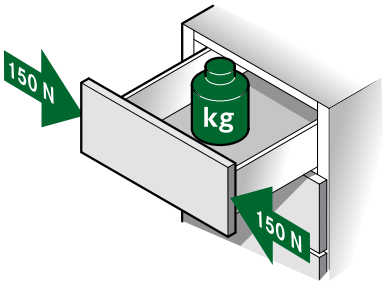 | 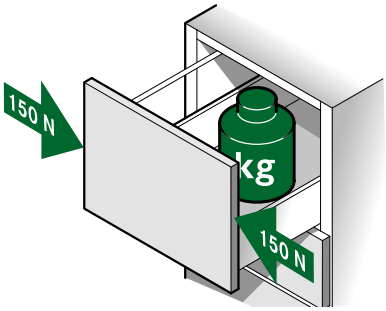 |
| **Dynamic overload of the front and fittings** | | |
| **Closing test:**<br>open and close 10 x at 1.0 m/sec with 40 kg load or 0.85 m/sec with 60 kg load | 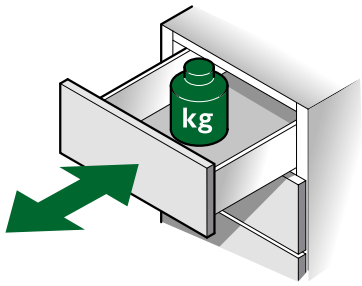 | 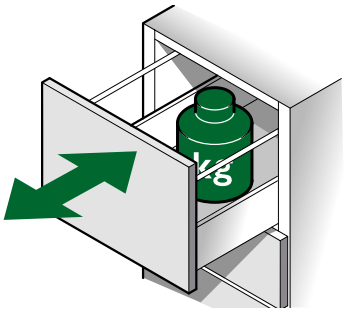 |
| **Pull-out safety** | | |
| 200 N<br>Static overload of the end fittings in an open condition 10 times with 200 N | 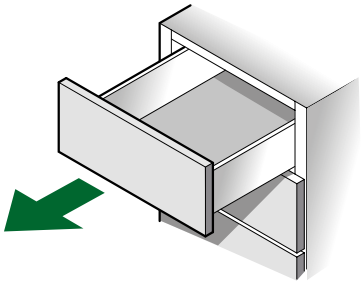 | |

In addition to the tests described above, GRASS drawers and pull-out systems are tested for corrosion resistance in compliance with EN 15338.

**SENSOMATIC** OPENING SYSTEM

## Lightly tapping or pulling is enough and the DWD XP drawers and pot drawers open as if by magic.

QUALITY CERTIFICATE
LGA

With or without a handle – Sensomatic opens every drawer or pull-out exactly and conveniently. For furniture designers this means: unlimited design freedom. For purist streamlined designs with an understated, handle-free elegance or fronts with grip recesses – this electro-mechanical opening system offers many fascinating possibilities.

**For a balance between stylish design and functional comfort.**

# DWD XP SENSOMATIC

Electro-mechanical opening of regular and pot drawers.
For a balance between stylish design and functional comfort.


| Product designation | Page |
|---|---|
| DWD XP Sensomatic single set | 84 |
| Standard cabinet with horizontal wooden stretcher | 86 |
| Standard cabinet with vertical wooden stretcher | 88 |
| Single drawer with overhead frame set mounting | 90 |
| Single drawer with back panel frame set mounting | 92 |
| Sink cabinet with bottom panel frame set mounting | 94 |
| Sink cabinet with side panel frame set mounting | 96 |

| | |
|---|---|
| Installation instructions | 98 |
| Assembly aids | 128 |

# DWD XP SENSOMATIC

Movement comfort at the highest level.
Versatile. Efficient. Compelling.

| | Product description | Page |
|---|---|---|
| | **DWD XP Sensomatic single set**<br>• Complete set for a single drawer<br>• For cabinet widths of up to 1200 mm<br>• Easy to install<br>• Very simple wiring (plug and play) | 84 |
| 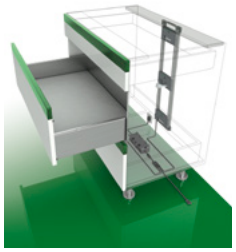 | **Standard cabinet with horizontal wooden stretcher**<br>• Minimal additional space requirement between drawer back panel and cabinet<br>• Very simple wiring (plug and play)<br>• Just one drive unit for cabinet widths of up to 1200 mm<br>• Large trigger range | 86 |
| | **Standard cabinet with vertical wooden stretcher**<br>• Minimal additional space requirement between drawer back panel and cabinet<br>• Very simple wiring (plug and play)<br>• Just one drive unit for cabinet widths of up to 1200 mm<br>• Large trigger range | 88 |
| | **Single drawer with overhead frame set mounting**<br>• Minimal additional space requirement between drawer back panel and cabinet<br>• Very simple wiring (plug and play)<br>• Just one drive unit for cabinet widths of up to 1200 mm<br>• Large trigger range | 90 |

| | Product description | Page |
|---|---|---|
| 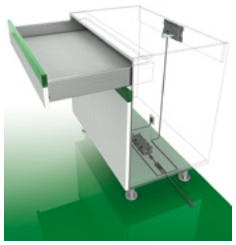 | **Single drawer with back panel frame set mounting**<br>• Minimal additional space requirement between drawer back panel and cabinet<br>• Very simple wiring (plug and play)<br>• Just one drive unit for cabinet widths of up to 1200 mm<br>• Large trigger range | 92 |
| 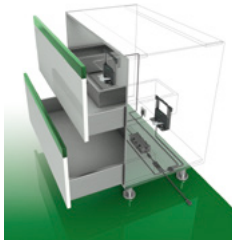 | **Sink cabinet with bottom panel frame set mounting**<br>• Minimal additional space requirement between drawer back panel and cabinet<br>• Very simple wiring (plug and play)<br>• Just one drive unit for cabinet widths of up to 1200 mm<br>• Large trigger range | 94 |
| 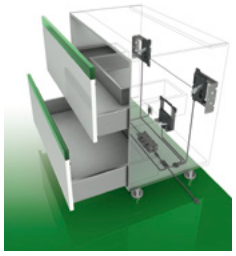 | **Sink cabinet with side panel frame set mounting**<br>• Minimal additional space requirement between drawer back panel and cabinet<br>• Very simple wiring (plug and play)<br>• Just one drive unit for cabinet widths of up to 1200 mm<br>• Large trigger range | 96 |

# DWD XP SENSOMATIC

Single set

- Electro-mechanical opening system
- Combines handle-free opening with Soft-close damping system
- 1 ejector unit for all weight classes
- Easy to fit
- Simple plug and play wiring
- Small additional installation depth
- Single sets include all components necessary for installation
- Ideal for heavy pot drawers and waste separating systems

- **Note:**
  Sets for other countries available on request

## ORDER INFORMATION

| **Sensomatic single set** | 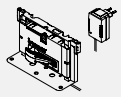 | |
|---|---|---|
| | Art.-no. | PU |
| for DWD XP | **F121**100**984** | 201 |

1 set includes:

**1** drive unit (1x)

**2** installation set (1x)

**3** Power supply unit with plug (1x)
(Central Europe, DE, FR, IT, CH, ES, RU, PT, NL)

**4** spring-loaded front buffers (4x)

drilling and installation instructions (1x)

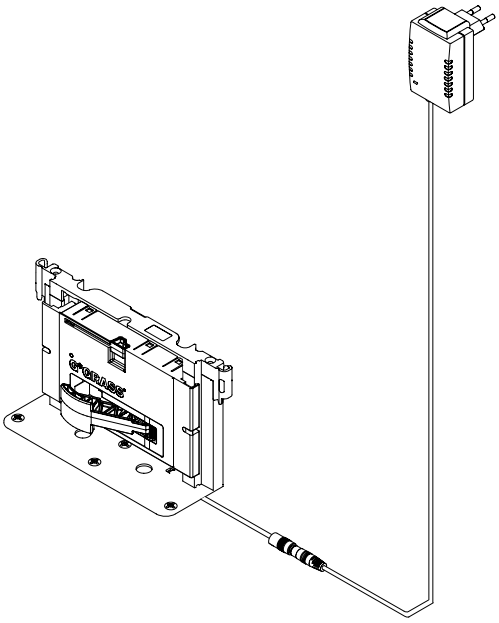

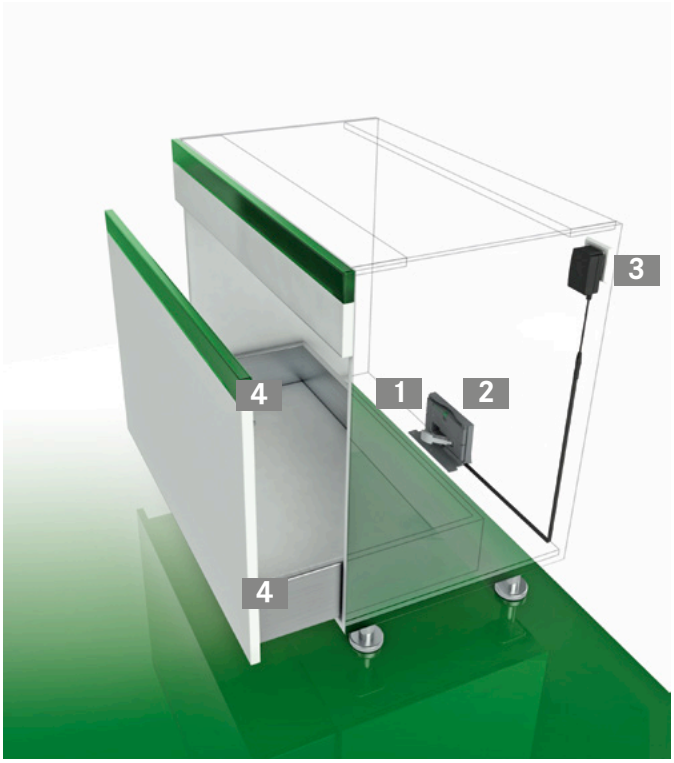


## PAGE REFERENCES


| | | | | | |
|---|---|---|---|---|---|
| Drawer sides | 11 | Add-on systems | 64 | Installation instructions | 98 |
| Slides | 50 | Accessories | 70 | Organising systems | 103 |
| Flat packs | 58 | Application examples | 72 | Assembly technology | 124 |

## INSTALLATION INFORMATION

### Installation dimensions

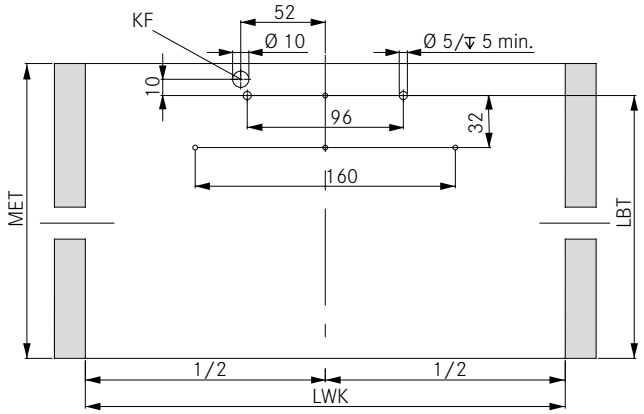


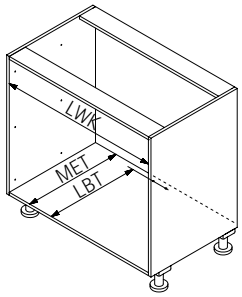


| RW | MET | LBT |
|---|---|---|
| Wood | NL+15 | NL |

### Installation set

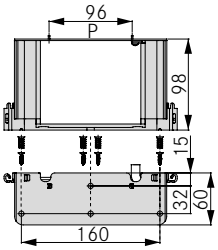


### Position of drive unit

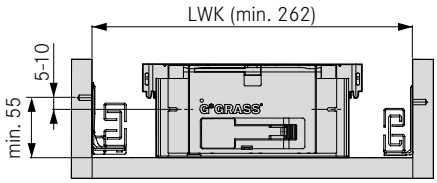


### Position of front buffer

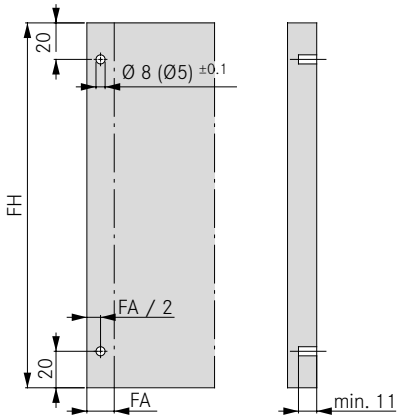


## LEGEND

| | |
|---|---|
| FA | Front overlay |
| FH | Height of front |
| KF | Cable routing |
| LBT | Depth of hole pattern |
| LWK | Inside cabinet width |
| MET | Minimum installation depth |
| NL | Nominal length |
| P | Positioning aid |
| RW | Back panel |

# DWD XP SENSOMATIC

Standard cabinet horizontal wooden stretcher

## ORDER INFORMATION

### 1 Drive unit

| | Art.-no. | PU |
|---|---|---|
| for DWD XP | F121100409 | 607 |

### 2 Frame sides including frame side cable

| Length | Art.-no. | PU |
|---|---|---|
| 653 | F121100284 | 207 |
| 750 | F121100285 | 207 |
| 1170 | F121100286 | 207 |

### 3 Fastening set consisting of: items 3a (2x) and 3b (2x)

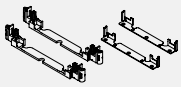

| | Art.-no. | PU |
|---|---|---|
| | F121100610 | 507 |

### 3a Frame connector

| | Art.-no. | PU |
|---|---|---|
| | F121100282 | 211 |

### 3b Fixing brackets top/bottom

| | Art.-no. | PU |
|---|---|---|
| | F121100270 | 211 |

### 4 Power supply unit

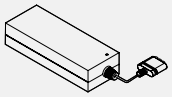

| | Art.-no. | PU |
|---|---|---|
| | F121109970 | 607 |

### 5 Power supply unit holder

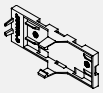

| | Art.-no. | PU |
|---|---|---|
| | F121100604 | 507 |

### 6 Front buffer, spring-loaded

| Ø | Front gap | Art.-no. | PU |
|---|---|---|---|
| 5 | 3 | F121100295 | 223 |
| 8 | | F121100298 | 223 |

### 7 Connection cable with 2-way adapter

| Length | Art.-no. | PU |
|---|---|---|
| 600 | F121100288 | 207 |
| 1000 | F121100289 | 207 |
| 2000 | F121100291 | 207 |

### 8 Power supply cable

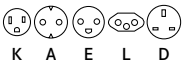


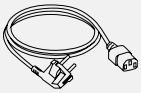

| Plug | Art.-no. | PU |
|---|---|---|
| Power supply cable K (USA, CAN) | F120069760 | 207 |
| Power supply cable A (DE, ES, FR, IT, RU, NL, SE) | F120069761 | 207 |
| Power supply cable E (DK) | F120069763 | 207 |
| Power supply cable L (CH) | F120069765 | 207 |
| Power supply cable D (UK, AE, MY) | F120069766 | 207 |
| without plug | F120069767 | 207 |

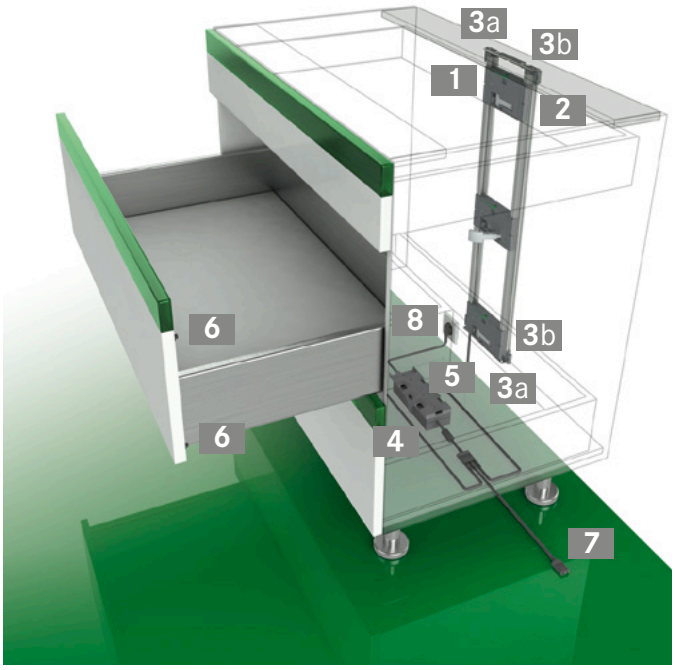


## PAGE REFERENCES


| | | | | | |
|---|---|---|---|---|---|
| Drawer sides | 11 | Add-on systems | 64 | Installation instructions | 98 |
| Slides | 50 | Accessories | 70 | Organising systems | 103 |
| Flat packs | 58 | Application examples | 72 | Assembly technology | 124 |

## INSTALLATION INFORMATION

### Installation dimensions

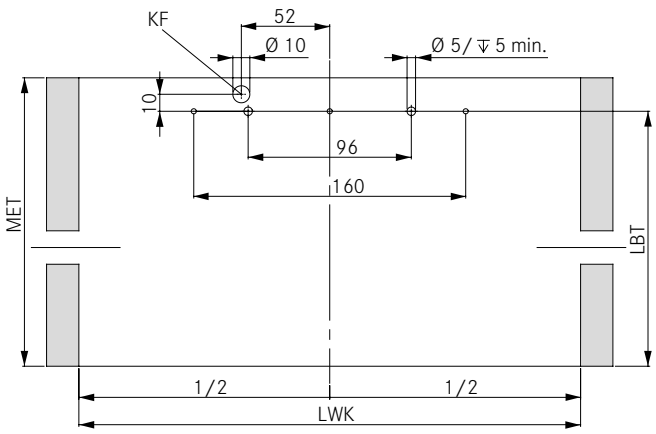


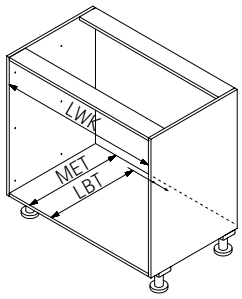


| RW | MET | LBT |
|---|---|---|
| Wood | NL+15 | NL |

### Fixing brackets top/bottom

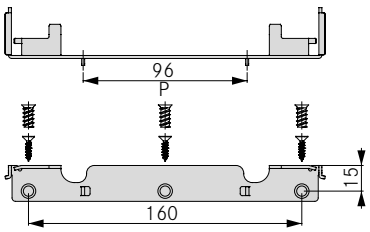


### Position of drive unit

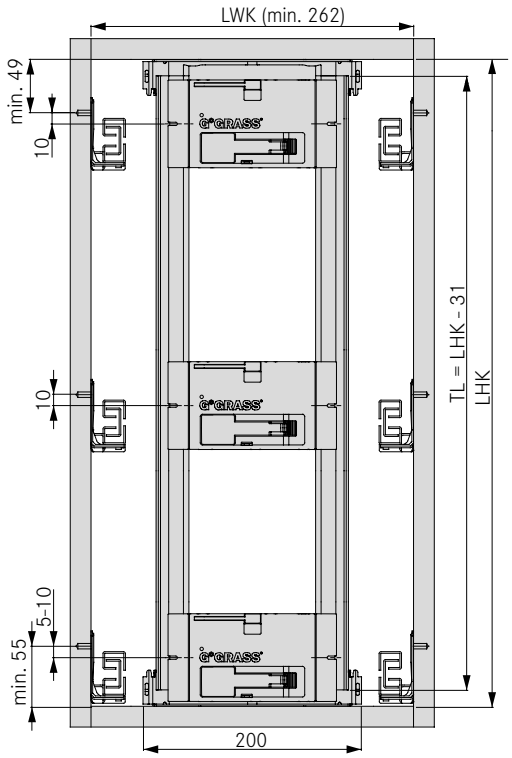


### Position of front buffer

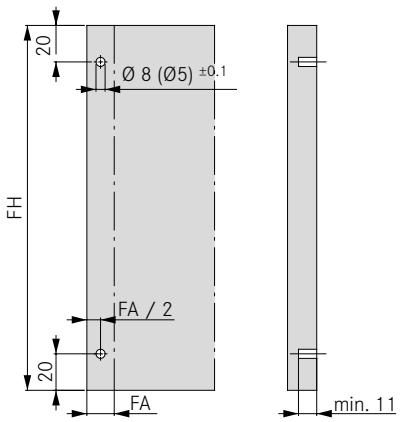


## LEGEND

| | |
|---|---|
| FA | Front overlay |
| FH | Height of front |
| KF | Cable routing |
| LBT | Depth of hole pattern |

| | |
|---|---|
| LHK | Inside cabinet height |
| LWK | Inside cabinet width |
| MET | Minimum installation depth |
| NL | Nominal length |

| | |
|---|---|
| P | Positioning aid |
| RW | Back panel |
| TL | Length of frame side |

# DWD XP SENSOMATIC

Standard cabinet vertical wooden stretcher

## ORDER INFORMATION

### 1 Drive unit

| | Art.-no. | PU |
|---|---|---|
| for DWD XP | F121100409 | 607 |

### 2 Frame sides including frame side cable

| Length | Art.-no. | PU |
|---|---|---|
| 653 | F121100284 | 207 |
| 750 | F121100285 | 207 |
| 1170 | F121100286 | 207 |

### 3 Frame connector

| | Art.-no. | PU |
|---|---|---|
| | F121100282 | 211 |

### 4 Fixing brackets top/bottom

| | Art.-no. | PU |
|---|---|---|
| | F121100270 | 211 |

### 5 Fixing bracket, back inside mounted

| | Art.-no. | PU |
|---|---|---|
| | F121100275 | 207 |

### 6 Power supply unit

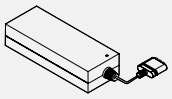

| | Art.-no. | PU |
|---|---|---|
| | F121109970 | 607 |

### 7 Power supply unit holder

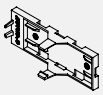

| | Art.-no. | PU |
|---|---|---|
| | F121100604 | 507 |

### 8 Front buffer, spring-loaded

| Ø | Front gap | Art.-no. | PU |
|---|---|---|---|
| 5 | 3 | F121100295 | 223 |
| 8 | | F121100298 | 223 |

### 9 Connection cable with 2-way adapter

| Length | Art.-no. | PU |
|---|---|---|
| 600 | F121100288 | 207 |
| 1000 | F121100289 | 207 |
| 2000 | F121100291 | 207 |

### 10 Power supply cable

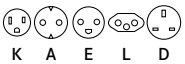


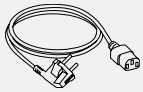

| Plug | Art.-no. | PU |
|---|---|---|
| Power supply cable K (USA, CAN) | F120069760 | 207 |
| Power supply cable A (DE, ES, FR, IT, RU, NL, SE) | F120069761 | 207 |
| Power supply cable E (DK) | F120069763 | 207 |
| Power supply cable L (CH) | F120069765 | 207 |
| Power supply cable D (UK, AE, MY) | F120069766 | 207 |
| without plug | F120069767 | 207 |

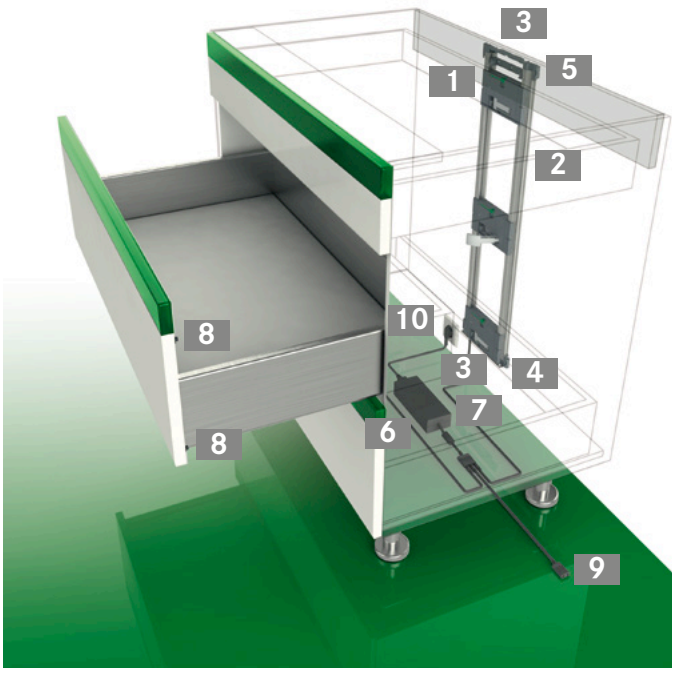


## PAGE REFERENCES


| | | | | | |
|---|---|---|---|---|---|
| Drawer sides | 11 | Add-on systems | 64 | Installation instructions | 98 |
| Slides | 50 | Accessories | 70 | Organising systems | 103 |
| Flat packs | 58 | Application examples | 72 | Assembly technology | 124 |

## INSTALLATION INFORMATION

### Installation dimensions

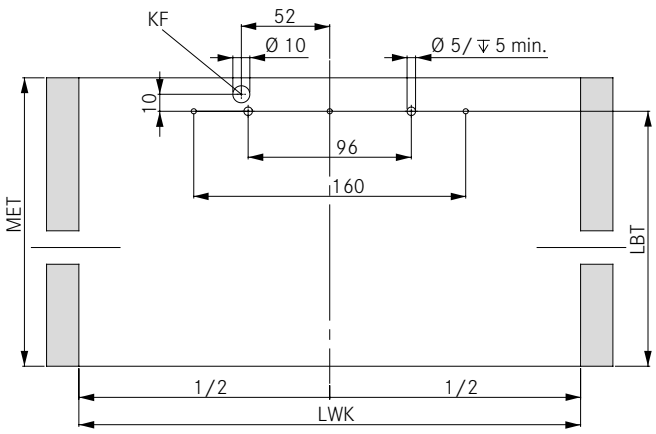


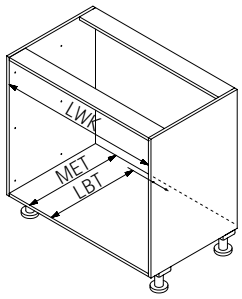


| RW | MET | LBT |
|---|---|---|
| Wood | NL+15 | NL |

### Fixing brackets top/bottom

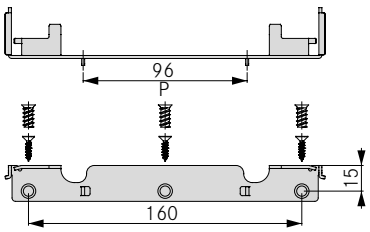


### Fixing bracket, back inside mounted

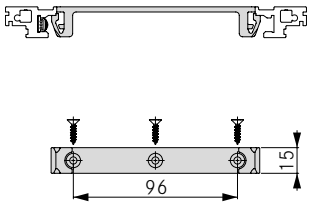


### Position of drive unit

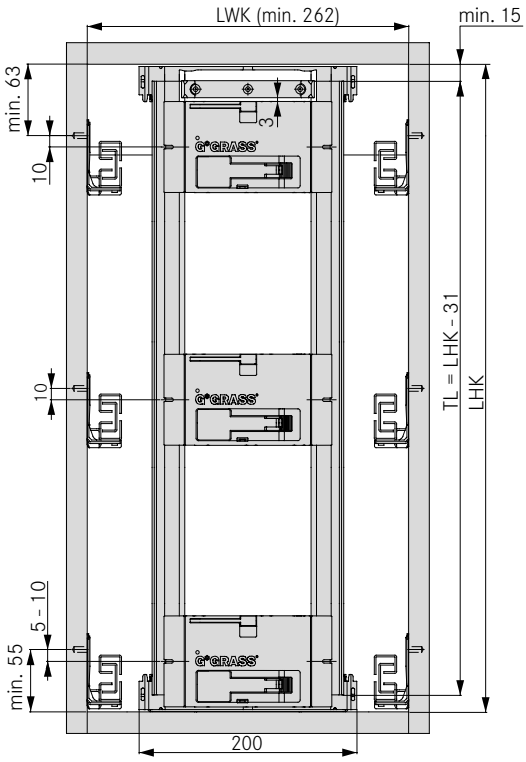


### Position of front buffer

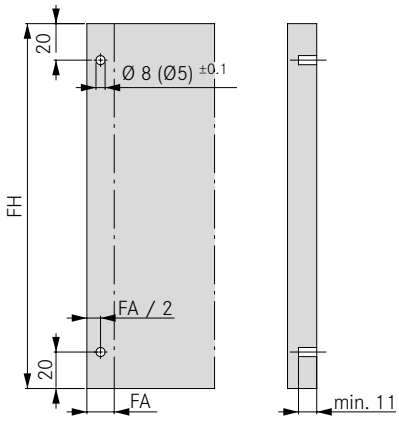


## LEGEND

| | | | | | |
|---|---|---|---|---|---|
| FA | Front overlay | LHK | Inside cabinet height | P | Positioning aid |
| FH | Height of front | LWK | Inside cabinet width | RW | Back panel |
| KF | Cable routing | MET | Minimum installation depth | TL | Length of frame side |
| LBT | Depth of hole pattern | NL | Nominal length | | |

# DWD XP SENSOMATIC

Single drawer with overhead frame set mounting

## ORDER INFORMATION

### 1 Drive unit

| | Art.-no. | PU |
|---|---|---|
| for DWD XP | F121100409 | 607 |

### 2 Installation set

| | Art.-no. | PU |
|---|---|---|
| | F121100273 | 207 |

### 3 Power supply unit

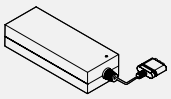

| | Art.-no. | PU |
|---|---|---|
| | F121109970 | 607 |

### 4 Power supply unit holder

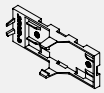

| | Art.-no. | PU |
|---|---|---|
| | F121100604 | 507 |

### 5 Front buffer, spring-loaded

| Ø | Front gap | Art.-no. | PU |
|---|---|---|---|
| 5 | 3 | F121100295 | 223 |
| 8 | | F121100298 | 223 |

### 6 Connection cable with 2-way adapter

| Length | Art.-no. | PU |
|---|---|---|
| 600 | F121100288 | 207 |
| 1000 | F121100289 | 207 |
| 2000 | F121100291 | 207 |

### 7 Power supply cable

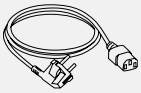

| Plug | Art.-no. | PU |
|---|---|---|
| Power supply cable K (USA, CAN) | F120069760 | 207 |
| Power supply cable A (DE, ES, FR, IT, RU, NL, SE) | F120069761 | 207 |
| Power supply cable E (DK) | F120069763 | 207 |
| Power supply cable L (CH) | F120069765 | 207 |
| Power supply cable D (UK, AE, MY) | F120069766 | 207 |
| without plug | F120069767 | 207 |

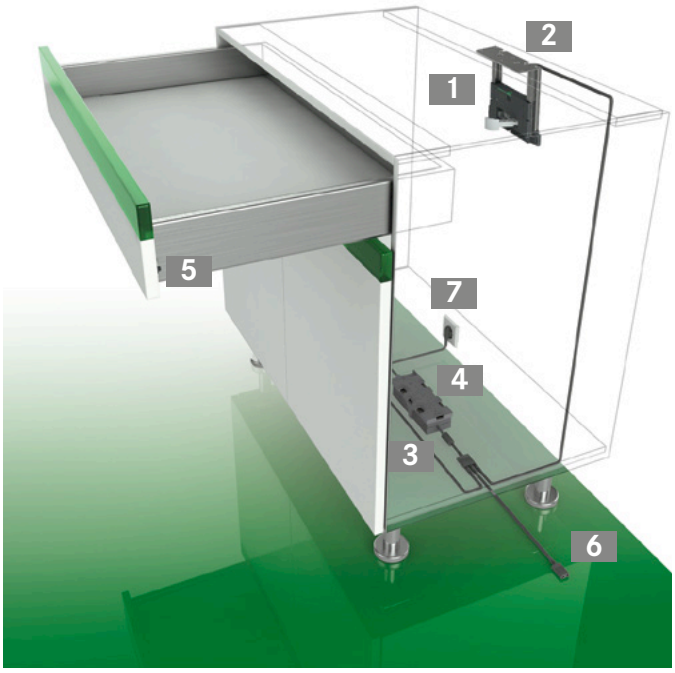


## PAGE REFERENCES


| | | | | | |
|---|---|---|---|---|---|
| Drawer sides | 11 | Add-on systems | 64 | Installation instructions | 98 |
| Slides | 50 | Accessories | 70 | Organising systems | 103 |
| Flat packs | 58 | Application examples | 72 | Assembly technology | 124 |

## INSTALLATION INFORMATION

### Installation dimensions

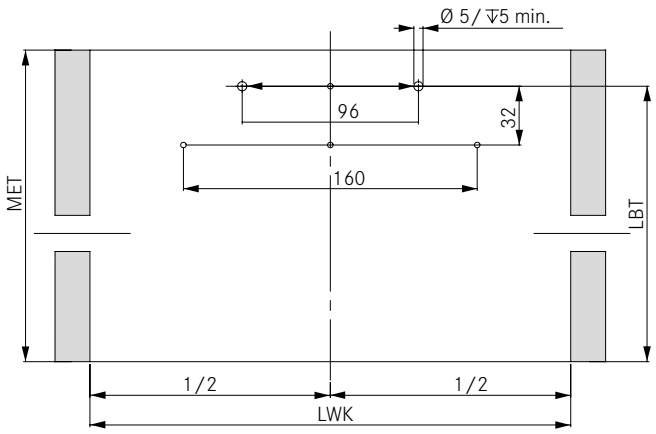


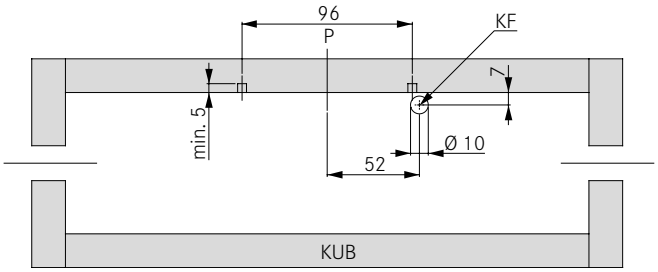


| RW | MET | LBT |
|---|---|---|
| Wood | NL+15 | NL |

### Installation set

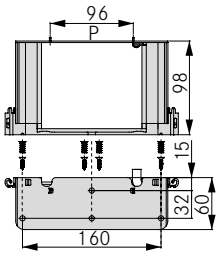


### Position of drive unit

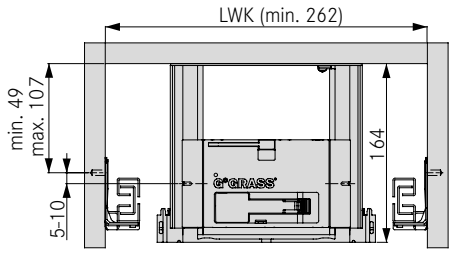


### Position of front buffer

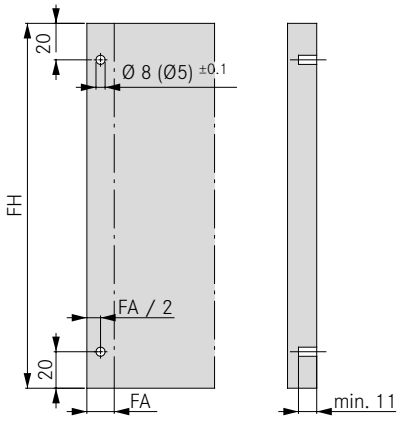


## LEGEND

| | |
|---|---|
| FA | Front overlay |
| FH | Height of front |
| KF | Cable routing |
| KUB | Cabinet base |
| LBT | Depth of hole pattern |
| LWK | Inside cabinet width |
| MET | Minimum installation depth |
| NL | Nominal length |
| P | Positioning aid |
| RW | Back panel |

# DWD XP SENSOMATIC

Single drawer with back panel frame set mounting

## ORDER INFORMATION

### 1 Drive unit

| | Art.-no. | PU |
|---|---|---|
| for DWD XP | F121100409 | 607 |

### 2 Frame sides for back panel frame set mounting including hole drilling

| | Art.-no. | PU |
|---|---|---|
| | F121100283 | 207 |

### 3 Frame connector

| | Art.-no. | PU |
|---|---|---|
| | F121100282 | 211 |

### 4 Power supply unit

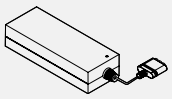

| | Art.-no. | PU |
|---|---|---|
| | F121109970 | 607 |

### 5 Power supply unit holder

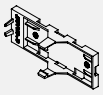

| | Art.-no. | PU |
|---|---|---|
| | F121100604 | 507 |

### 6 Front buffer, spring-loaded

| Ø | Front gap | Art.-no. | PU |
|---|---|---|---|
| 5 | 3 | F121100295 | 223 |
| 8 | | F121100298 | 223 |

### 7 Connection cable with 2-way adapter

| Length | Art.-no. | PU |
|---|---|---|
| 600 | F121100288 | 207 |
| 1000 | F121100289 | 207 |
| 2000 | F121100291 | 207 |

### 8 Power supply cable

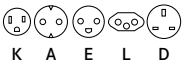

| Plug | Art.-no. | PU |
|---|---|---|
| Power supply cable K (USA, CAN) | F120069760 | 207 |
| Power supply cable A (DE, ES, FR, IT, RU, NL, SE) | F120069761 | 207 |
| Power supply cable E (DK) | F120069763 | 207 |
| Power supply cable L (CH) | F120069765 | 207 |
| Power supply cable D (UK, AE, MY) | F120069766 | 207 |
| without plug | F120069767 | 207 |

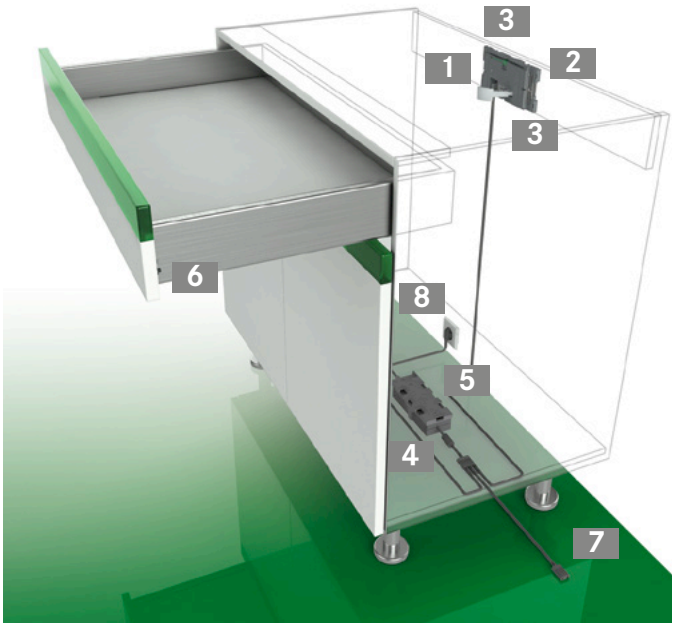


## PAGE REFERENCES


| | | | | | |
|---|---|---|---|---|---|
| Drawer sides | 11 | Add-on systems | 64 | Installation instructions | 98 |
| Slides | 50 | Accessories | 70 | Organising systems | 103 |
| Flat packs | 58 | Application examples | 72 | Assembly technology | 124 |

## INSTALLATION INFORMATION

### Installation dimensions

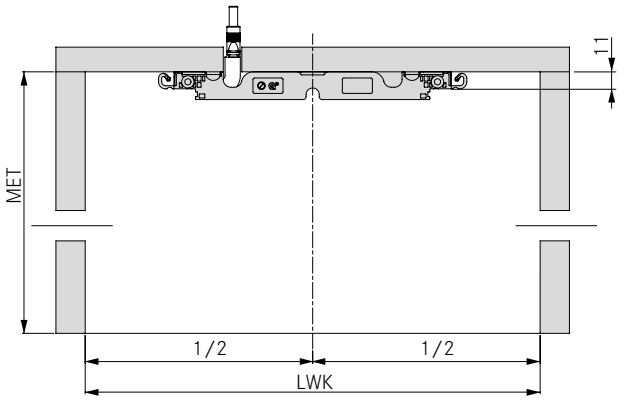


| RW | MET |
|---|---|
| Wood | NL+15 |

### Frame sides

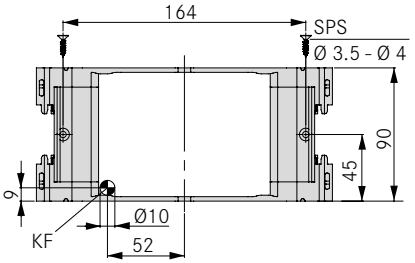


### Position of drive unit

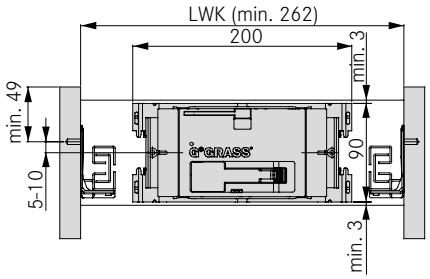


### Position of front buffer

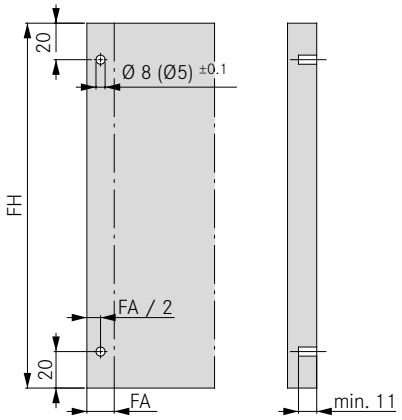


## LEGEND

| | |
|---|---|
| FA | Front overlay |
| FH | Height of front |
| KF | Cable routing |
| LWK | Inside cabinet width |
| MET | Minimum installation depth |
| NL | Nominal length |
| RW | Back panel |
| SPS | Chipboard screw |

# DWD XP SENSOMATIC

Sink cabinet with bottom panel frame set mounting

## ORDER INFORMATION

### 1 Drive unit

| | Art.-no. | PU |
|---|---|---|
| for DWD XP | F121100409 | 607 |

### 2 Installation set

| | Art.-no. | PU |
|---|---|---|
| | F121100273 | 207 |

### 3 Power supply unit

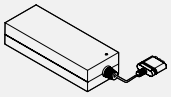

| | Art.-no. | PU |
|---|---|---|
| | F121109970 | 607 |

### 4 Power supply unit holder

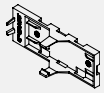

| | Art.-no. | PU |
|---|---|---|
| | F121100604 | 507 |

### 5 Front buffer, spring-loaded

| Ø | Front gap | Art.-no. | PU |
|---|---|---|---|
| 5 | 3 | F121100295 | 223 |
| 8 | | F121100298 | 223 |

### 6 4-way adapter

| | Art.-no. | PU |
|---|---|---|
| | F121100293 | 207 |

### 7 Connection cable with 2-way adapter

| Length | Art.-no. | PU |
|---|---|---|
| 600 | F121100288 | 207 |
| 1000 | F121100289 | 207 |
| 2000 | F121100291 | 207 |

### 8 Power supply cable

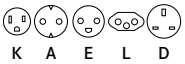

| Plug | Art.-no. | PU |
|---|---|---|
| Power supply cable K (USA, CAN) | F120069760 | 207 |
| Power supply cable A (DE, ES, FR, IT, RU, NL, SE) | F120069761 | 207 |
| Power supply cable E (DK) | F120069763 | 207 |
| Power supply cable L (CH) | F120069765 | 207 |
| Power supply cable D (UK, AE, MY) | F120069766 | 207 |
| without plug | F120069767 | 207 |

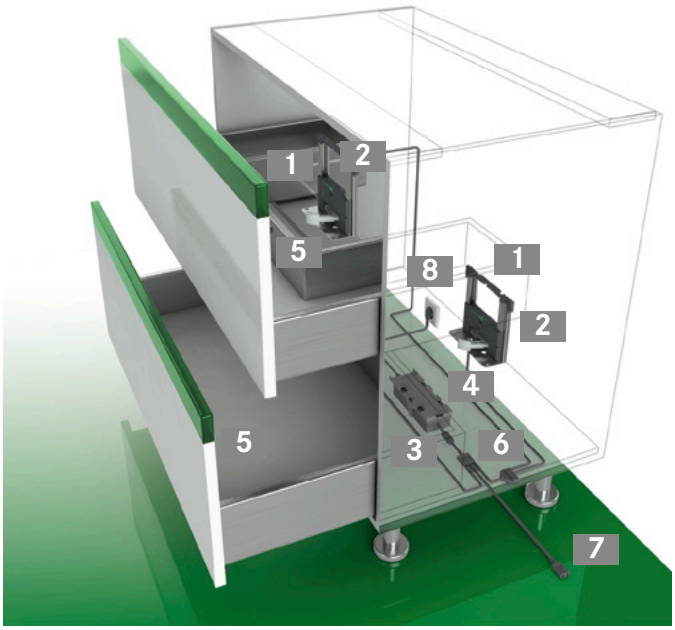


## PAGE REFERENCES


| | | | | | |
|---|---|---|---|---|---|
| Drawer sides | 11 | Add-on systems | 64 | Installation instructions | 98 |
| Slides | 50 | Accessories | 70 | Organising systems | 103 |
| Flat packs | 58 | Application examples | 72 | Assembly technology | 124 |

## INSTALLATION INFORMATION

### Installation dimensions – bottom panel frame set mounting

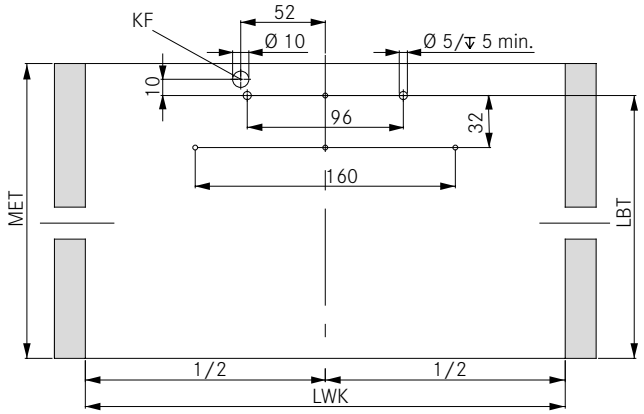


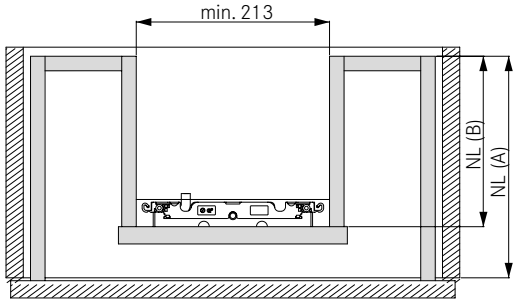


| RW | MET | LBT | LBTS |
|---|---|---|---|
| Wood | NL+15 | NL | NL(A) - NL(B) + 9 |

### Installation set

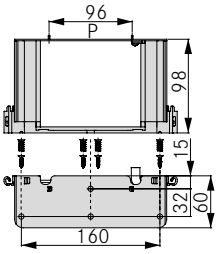


### Sink cabinet installation

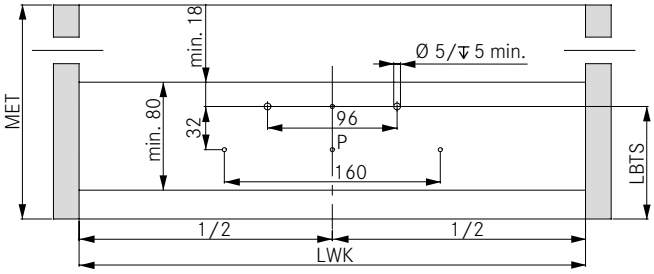


### Position of drive unit

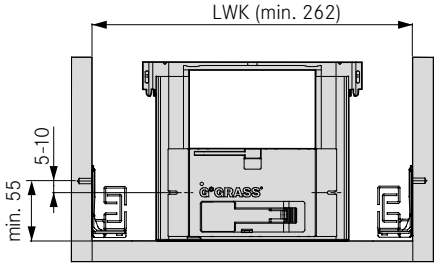


### Position of front buffer

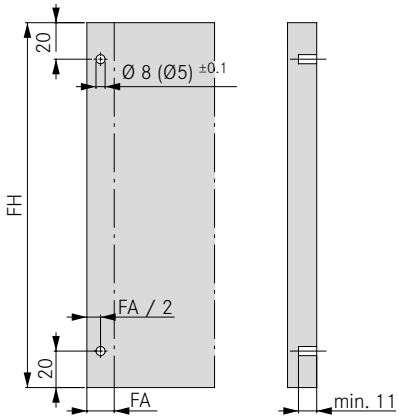


## LEGEND

| | | | | | |
|---|---|---|---|---|---|
| FA | Front overlay | LBTS | Sink drawer, depth of hole pattern | P | Positioning aid |
| FH | Height of front | LWK | Inside cabinet width | RW | Back panel |
| KF | Cable routing | MET | Minimum installation depth | | |
| LBT | Depth of hole pattern | NL | Nominal length | | |

# DWD XP SENSOMATIC

Sink cabinet with side panel frame set mounting

## ORDER INFORMATION

### 1 Drive unit

| | Art.-no. | PU |
|---|---|---|
| for DWD XP | F121100409 | 607 |

### 2 Installation set

| | Art.-no. | PU |
|---|---|---|
| | F121100273 | 207 |

### 3 Power supply unit

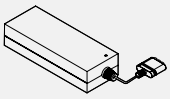

| | Art.-no. | PU |
|---|---|---|
| | F121109970 | 607 |

### 4 Power supply unit holder

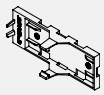

| | Art.-no. | PU |
|---|---|---|
| | F121100604 | 507 |

### 5 Front buffer, spring-loaded

| Ø | Front gap | Art.-no. | PU |
|---|---|---|---|
| 5 | 3 | F121100295 | 223 |
| 8 | | F121100298 | 223 |

### 6 Synchronisation cable 10 m

| | Art.-no. | PU |
|---|---|---|
| | F121100287 | 207 |

### 7 4-way adapter

| | Art.-no. | PU |
|---|---|---|
| | F121100293 | 207 |

### 8 Connection cable with 2-way adapter

| Length | Art.-no. | PU |
|---|---|---|
| 600 | F121100288 | 207 |
| 1000 | F121100289 | 207 |
| 2000 | F121100291 | 207 |

### 9 Power supply cable

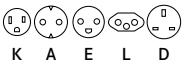


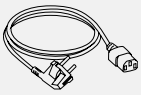

| Plug | Art.-no. | PU |
|---|---|---|
| Power supply cable K (USA, CAN) | F120069760 | 207 |
| Power supply cable A (DE, ES, FR, IT, RU, NL, SE) | F120069761 | 207 |
| Power supply cable E (DK) | F120069763 | 207 |
| Power supply cable L (CH) | F120069765 | 207 |
| Power supply cable D (UK, AE, MY) | F120069766 | 207 |
| without plug | F120069767 | 207 |

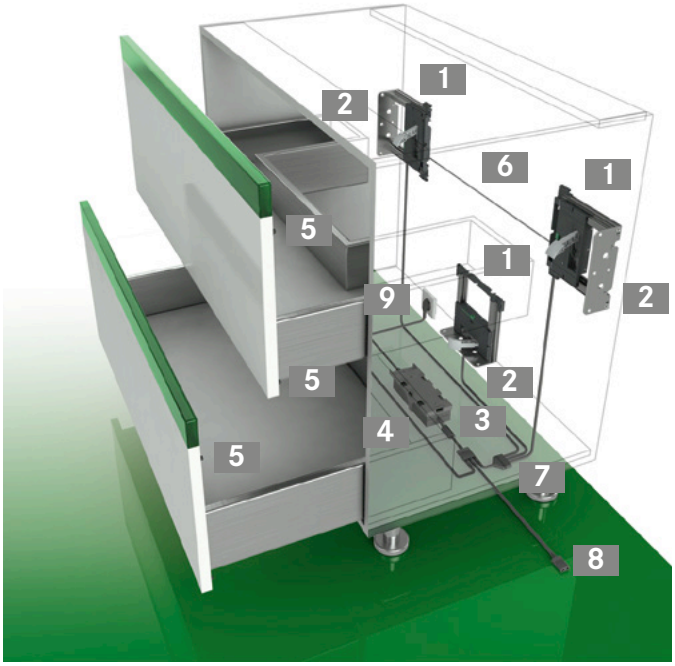


## NOTE

**Use:**
DWD XP 40 kg from NL 450
DWD XP 60 kg from NL 500

## PAGE REFERENCES


| | | | | | |
|---|---|---|---|---|---|
| Drawer sides | 11 | Add-on systems | 64 | Installation instructions | 98 |
| Slides | 50 | Accessories | 70 | Organising systems | 103 |
| Flat packs | 58 | Application examples | 72 | Assembly technology | 124 |

## INSTALLATION INFORMATION

Installation dimensions – bottom panel frame set mounting

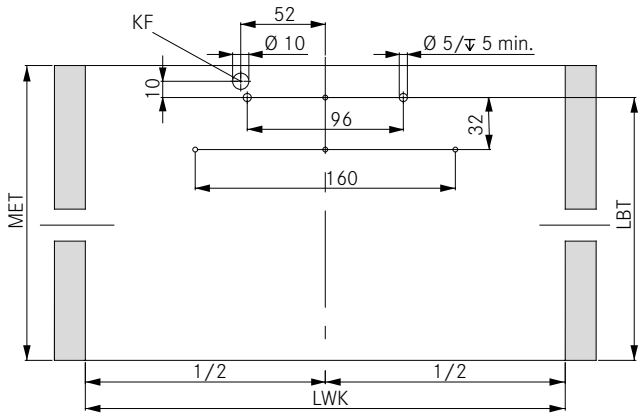


Installation dimensions – side panel frame set mounting

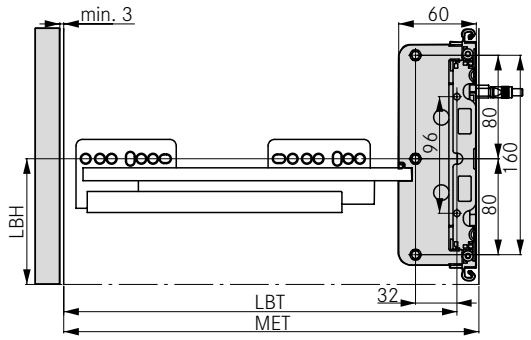


| RW | MET | LBT |
|---|---|---|
| Wood | NL+15 | NL |

Installation set

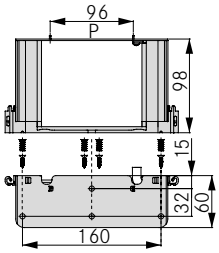


Position of drive unit, bottom panel frame set mounting

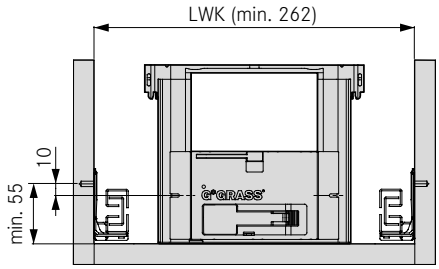


Position of drive unit, side panel frame set mounting

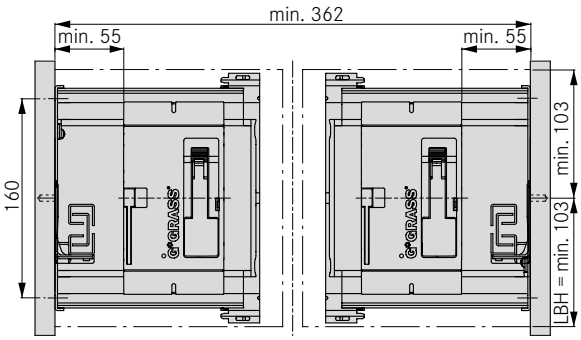


Position of front buffer

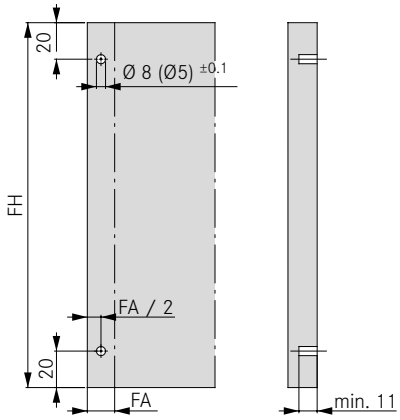


## LEGEND

| | | | | | |
|---|---|---|---|---|---|
| FA | Front overlay | LBT | Depth of hole pattern | P | Positioning aid |
| FH | Height of front | LWK | Inside cabinet width | RW | Back panel |
| KF | Cable routing | MET | Minimum installation depth | | |
| LBH | Height of hole pattern | NL | Nominal length | | |

## INSTALLATION INSTRUCTIONS

Stretcher installation

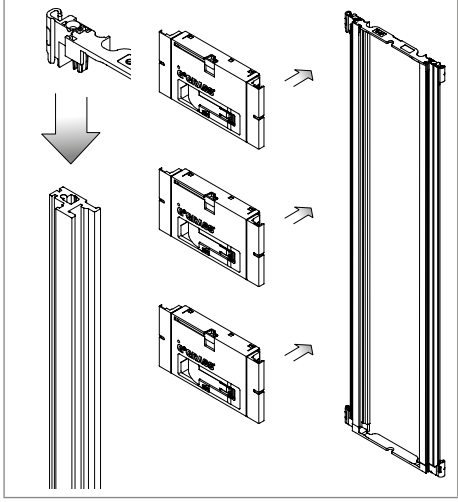

Standard cabinet installation with horiztontal wooden stretcher

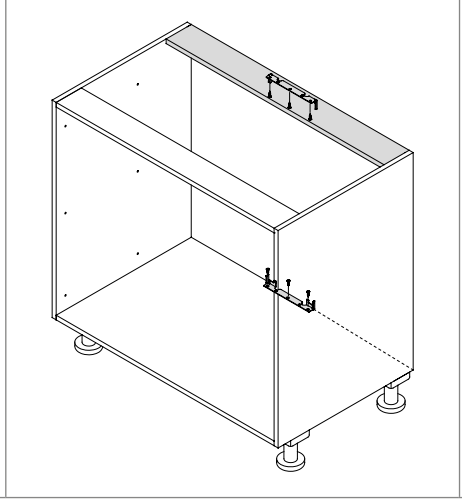

Standard cabinet installation with vertical wooden stretcher

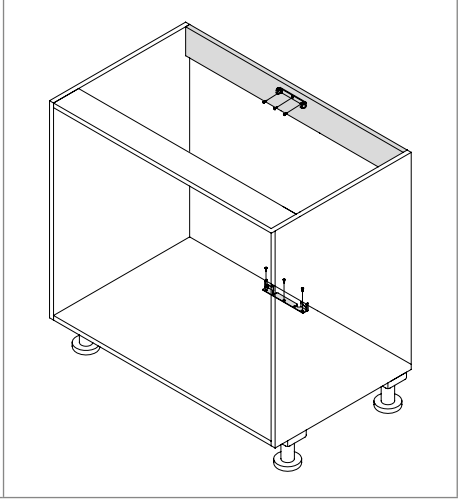

Overhead frame set mounting, single drawer

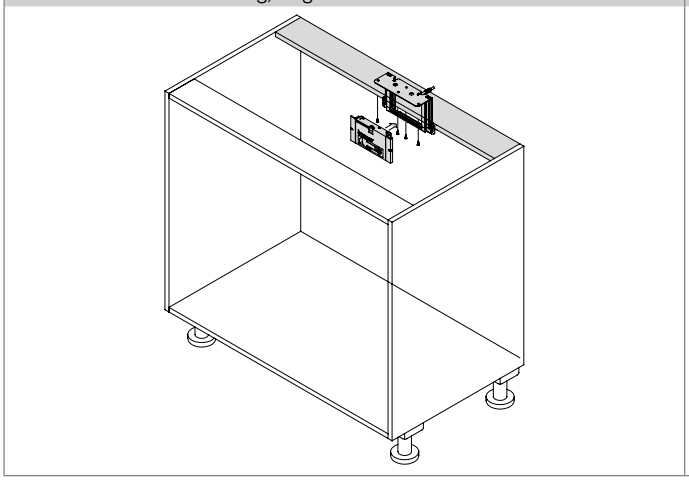

Back panel frame set mounting, single drawer

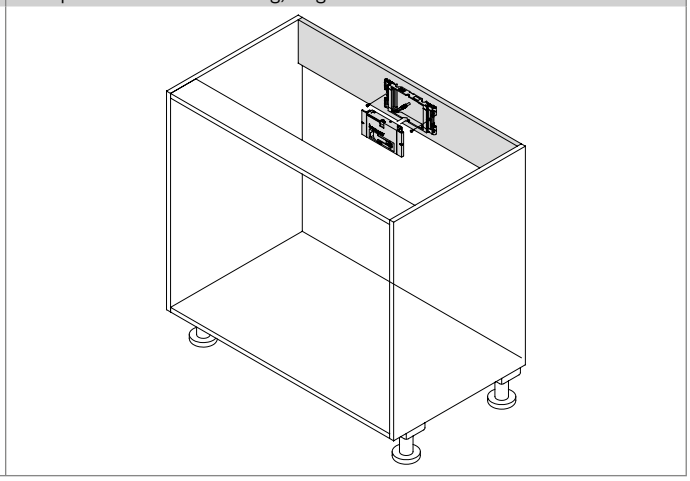

Bottom panel frame set mounting, sink cabinet

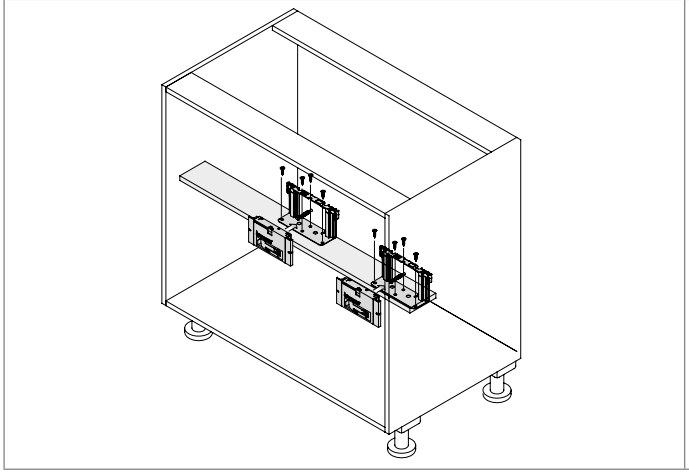

Side panel frame set mounting, sink cabinet

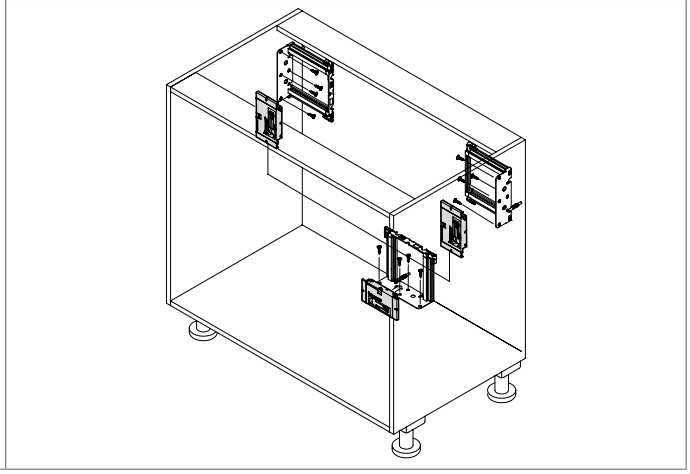

## PAGE REFERENCES


| | |
|---|---|
| Drawer sides | 11 |
| Slides | 50 |
| Horizontal wooden stretcher | 86 |
| Vertical wooden stretcher | 88 |
| Overhead frame set mounting | 90 |
| Back panel frame set mounting | 92 |
| Bottom panel frame set mounting | 94 |
| Side panel frame set mounting | 96 |
| Assembly technology | 124 |

## INSTALLATION INSTRUCTIONS

Cutting stretcher to length (horizontal and vertical wooden stretcher)

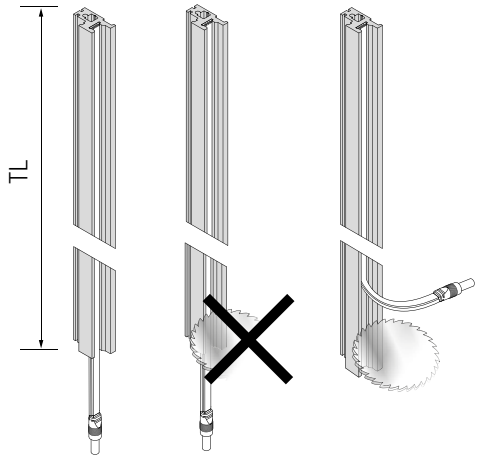


Installation of drive unit

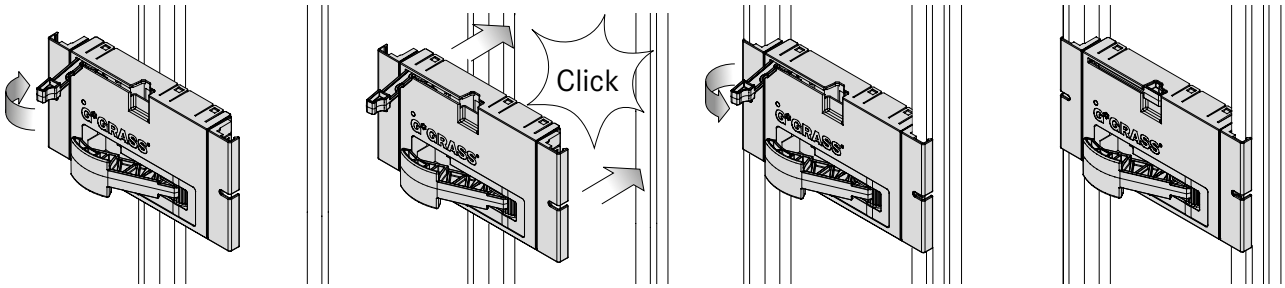


Wiring (connection sequence)

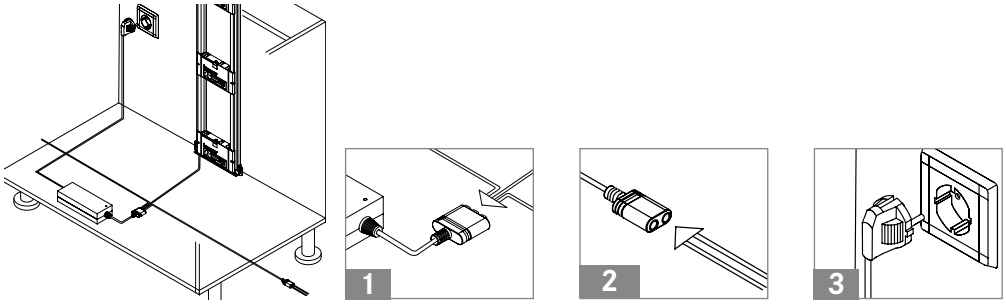


Inserting front buffer

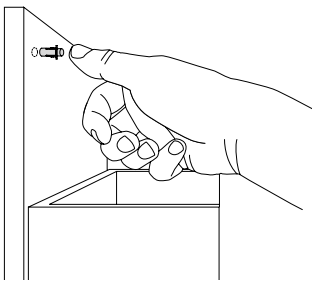

Do not drive in or glue!

Installing the synchronisation cable

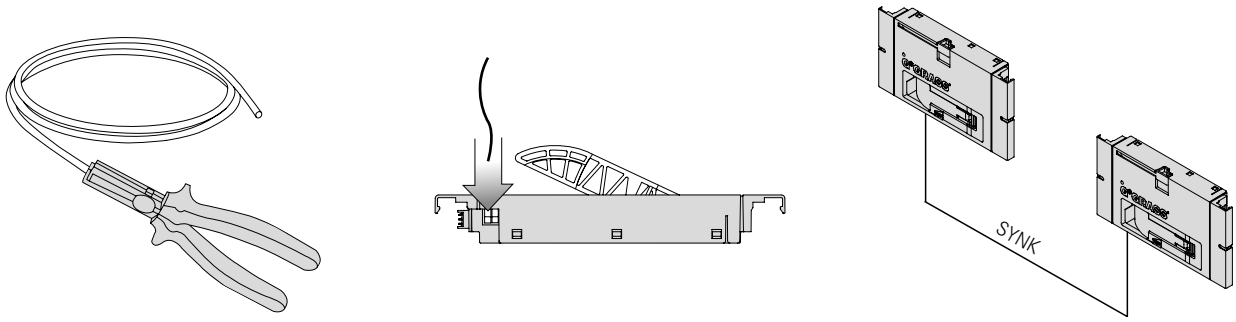


## LEGEND

| | |
|---|---|
| SYNK | Synchronisation cable |
| TL | Length of frame side |

# DWD XP SENSOMATIC
Dismantling instructions

## DISMOUNTING

Dismantling the drive unit

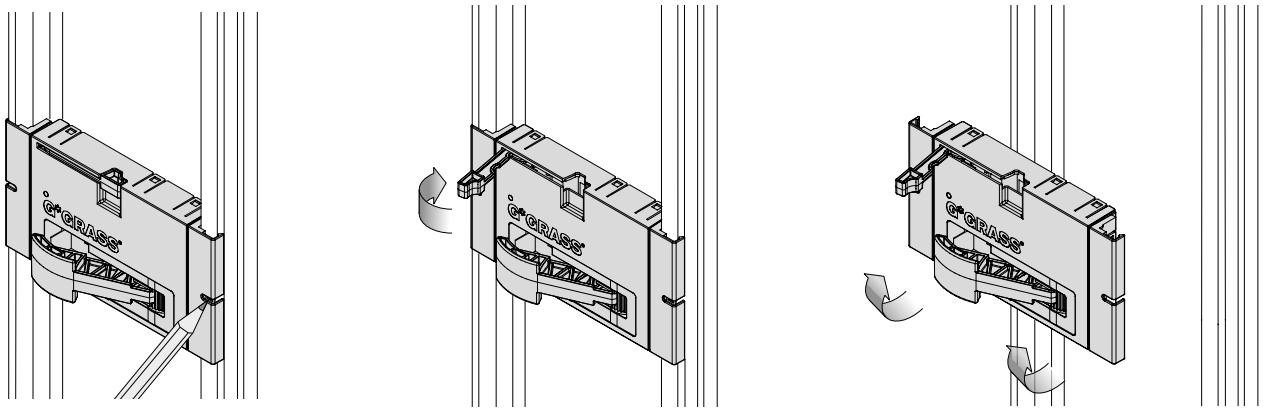

Dismantling the frame sides

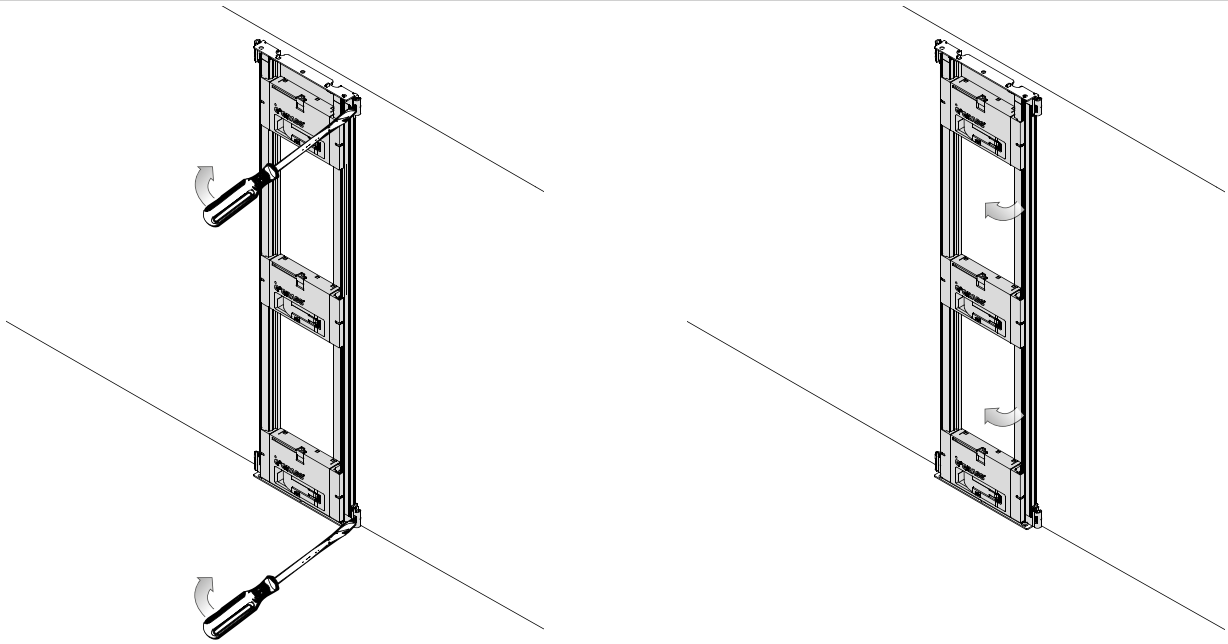

Dismantling the synchronisation cable

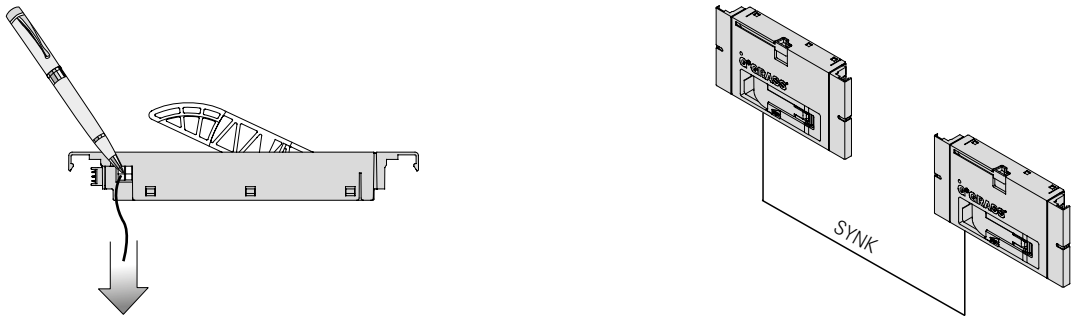


## PAGE REFERENCES


| | | | | | |
|---|---|---|---|---|---|
| Drawer sides | 11 | Vertical wooden stretcher | 88 | Bottom panel frame set mounting | 94 |
| Slides | 50 | Overhead frame set mounting | 90 | Side panel frame set mounting | 96 |
| Horizontal wooden stretcher | 86 | Back panel frame set mounting | 92 | Assembly technology | 124 |

## ADJUSTMENT

Variable drive force

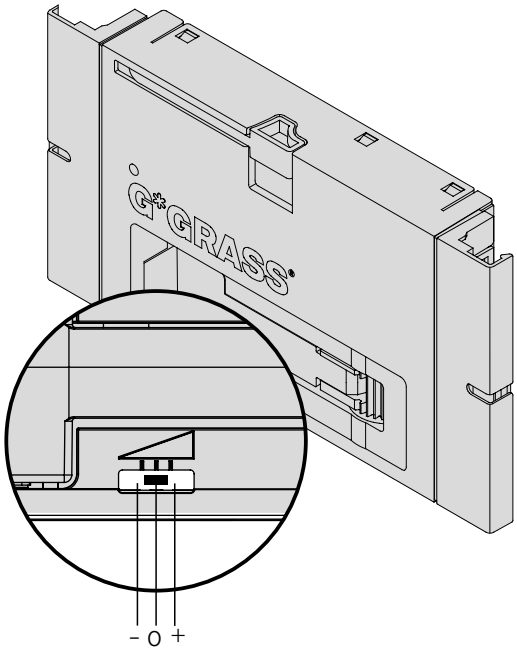


## NOTES

- Cabinet must be level
- System must be disconnected for installation and dismantling!
- Provide switched sockets
- From a cabinet width of 1200 mm we recommend the installation of 2 drive units. The synchronisation cable ensures that these units are activated simultaneously
- **Important:**
  In the area of the drive lever, no screws must be inserted into the drawer back panel
- Per power supply unit it is possible to operate up to 30 drive units

## TECHNICAL DATA

- **Application area**
  only in dry, indoor rooms
- **Power supply unit**
  Voltage supply: 100 to 240 V
  Power supply frequency: 50 to 60 Hz
  Max. power output: 230 W
- **Drive unit**
  Voltage supply: 24 V
- **Operating conditions**
  Temperature: 0 to 50 °C
  Relative humidity: 15 to 90 %
  non-condensing

## LEGEND

| | |
|---|---|
| SYNK | Synchronisation cable |

## **Tavinea Sorto.**
Simple. Attractive. Tidy.

The high-quality frame elements are made up of 6 mm narrow metal profiles, making the new interior accessory system with its modern graphical design both functional and attractive. In addition, the innovative corner connection of the frames ensures firm attachment to the base and scratch-free positioning at the side walls. Order can also be attractive. Purist, sleek design, matt surfaces, timeless colours – the understated elegance of Tavinea Sorto ensures that drawers look attractive whether in the kitchen, bathroom, living room or bedroom.

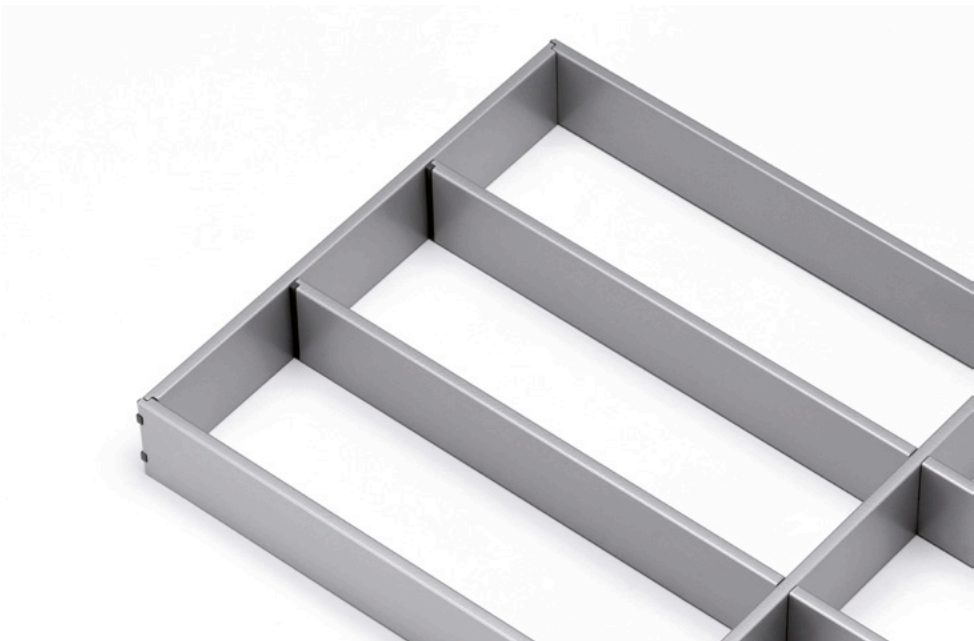

# DIVIDING AND ORGANISING SYSTEMS

Modular dividing and organising systems create a tidy arrangement with everything visible at a glance

| | Product description | | Page |
|---|---|---|---|
| | **Tavinea Sorto**<br>• Modular interior accessory system<br>• Perfect organisation for drawers with cutlery and small items<br>• High-quality frames and divider rails made of powder-coated steel | 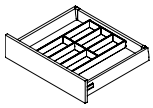 | 104 |
| 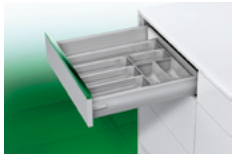 | **Magic Sorto**<br>• Perfect organisation of drawers for cutlery and small sundry items<br>• High-quality stainless steel trays<br>• Modular extension possible | 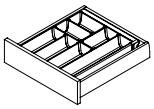 | 110 |
| 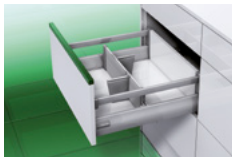 | **DWD XP Magic Optima for pot drawer division**<br>• Individual dividing system for pot drawers with drawer side height H95<br>• Easy installation without tools<br>• Can be used for round railings, rectangular railings, Variowing or glass side elements<br>• Not suitable for Duowing<br>• Tool-free adjustment for variable use of storage space | 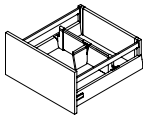 | 112 |
| | **DWD XP Magic Optima for Variowing and round railing**<br>• Individual dividing system for pot drawers with drawer side height H95 and Variowing add-on system<br>• Easy installation without tools<br>• Tool-free adjustment for variable use of storage space | 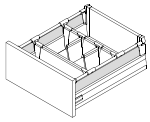 | 114 |
| | **DWD XP Magic Optima for Duowing**<br>• Individual dividing system for pot drawers with drawer side height H95 and Duowing add-on system<br>• Easy installation without tools<br>• Tool-free adjustment for variable use of storage space | 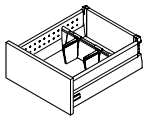 | 116 |
| | **DWD XP Magic Classic for Duowing**<br>• Variable dividing system for pot drawers with Duowing<br>• Fast, tool-free installation using spring/click connection<br>• Can be retrofitted at any time | 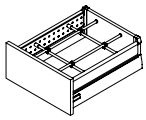 | 118 |
| | **DWD XP rectangular railing divider**<br>• Divider profile for cutting to length<br>• Easy installation without tools<br>• Can be retrofitted at any time | 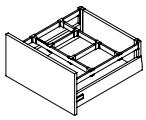 | 120 |
| | **DWD XP round railing divider and bottle holder**<br>• Easy installation without tools<br>• Can be retrofitted at any time<br>• Extendable with double railing or bottle holder | 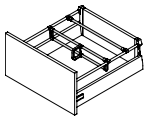 | 122 |

# TAVINEA SORTO

Interior accessory system

- Perfect organisation for cutlery and small items
- High-quality frames and divider rails made of powder-coated steel
- Innovative anti-slip device ensures firm seating on the base panel

**Packaging unit (PU):**
201 = 1 unit in a cardboard box
207 = 10 units in a cardboard box

**Notes:**
- Tavinea Sorto B186 can be used with cabinet widths from 300
- Tavinea Sorto B276 can be used with cabinet widths from 400

## ORDER INFORMATION

**1 Tavinea Sorto B186**
**Single item**

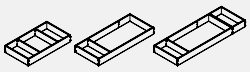

| NL | Silver grey | | Graphite | |
|---|---|---|---|---|
| | Art.-no. | PU | Art.-no. | PU |
| 350 | **F007130148** | 201 | **F007130149** | 201 |
| 400 | **F007130151** | 201 | **F007130152** | 201 |
| 450 | **F007130154** | 201 | **F007130155** | 201 |
| 500 | **F007130157** | 201 | **F007130158** | 201 |
| 550 | **F007130160** | 201 | **F007130161** | 201 |
| 600 | **F007130163** | 201 | **F007130164** | 201 |
| 650 | **F007130166** | 201 | **F007130167** | 201 |

**2 Tavinea Sorto B276**
**Single item**

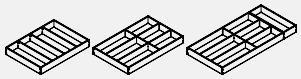

| NL | Silver grey | | Graphite | |
|---|---|---|---|---|
| | Art.-no. | PU | Art.-no. | PU |
| 400 | **F007130130** | 201 | **F007130131** | 201 |
| 450 | **F007130133** | 201 | **F007130134** | 201 |
| 500 | **F007130136** | 201 | **F007130137** | 201 |
| 550 | **F007130139** | 201 | **F007130140** | 201 |
| 600 | **F007130142** | 201 | **F007130143** | 201 |
| 650 | **F007130145** | 201 | **F007130146** | 201 |

**3 Tavinea Sorto divider rail**
**Single item**

| NL | Silver grey | | Graphite | |
|---|---|---|---|---|
| | Art.-no. | PU | Art.-no. | PU |
| 350 | **F007130169** | 207 | **F007130170** | 207 |
| 400 | **F007130172** | 207 | **F007130173** | 207 |
| 450 | **F007130175** | 207 | **F007130176** | 207 |
| 500 | **F007130178** | 207 | **F007130179** | 207 |
| 550 | **F007130181** | 207 | **F007130182** | 207 |
| 600 | **F007130184** | 207 | **F007130185** | 207 |
| 650 | **F007130187** | 207 | **F007130188** | 207 |

## PAGE REFERENCES


| | | | | | |
|---|---|---|---|---|---|
| Drawer sides | 11 | Add-on systems | 64 | Assembly technology | 124 |
| Slides | 50 | Accessories | 106 | Assembly aids | 128 |
| Flat packs | 58 | Installation information | 108 | Packaging code | 131 |

## 1 Tavinea Sorto B186

NL 350

NL 400 - 500

NL 550 - 650

## 2 Tavinea Sorto B276

NL 400

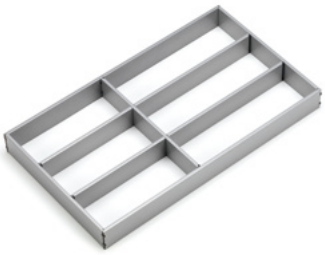

NL 450 - 500

NL 550 - 650

## 3 Tavinea Sorto divider rail

**Tavinea Sorto accessories** **see page 106**

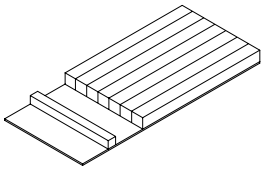

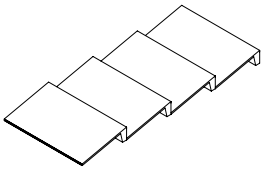

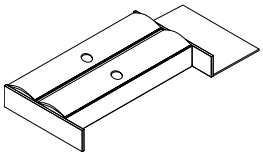

## LEGEND

| | |
|---|---|
| B | Width |
| KB | Cabinet width |
| NL | Nominal length |

# TAVINEA SORTO
Accessories

- The right accessories for all requirements
- Knives, spice jars, cooking foil, cutlery or Eau de Toilette – with Tavinea Sorto accessories, everything has its perfect place
- High-quality materials: Aluminium and solid wood

**Packaging unit (PU):**
201 = 1 unit in a cardboard box

**Note:**
Accessories are hygiene-tested and non-toxic

## ORDER INFORMATION

**1 Knife block**
**Single item**

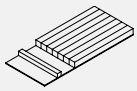
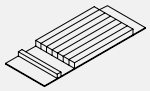

| Material | NL 450 | PU | NL 500 | PU | NL 550[1] | PU |
|---|---|---|---|---|---|---|
| Light ash | **F007**108**661** | 201 | **F007**102**418** | 201 | **F007**102**418**<br>**F007**108**659** | 201 |
| Dark ash | **F007**108**662** | 201 | **F007**102**424** | 201 | **F007**102**424**<br>**F007**108**660** | 201 |

[1] NL 550 comprises a knife block and levelling element. Please order both article numbers.

**2 Spice rack**
**Single item**

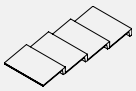
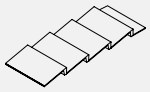

| Material | | | NL 500 | PU | NL 550[1] | PU |
|---|---|---|---|---|---|---|
| Light ash | | | **F007**102**420** | 201 | **F007**102**420**<br>**F007**108**659** | 201 |
| Dark ash | | | **F007**102**426** | 201 | **F007**102**426**<br>**F007**108**660** | 201 |

[1] NL 550 comprises a spice rack and levelling element. Please order both article numbers.

**3 Foil holder**
**Single item**

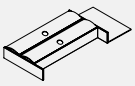
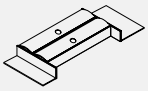

| Material | | | NL 500 | PU | NL 550[1] | PU |
|---|---|---|---|---|---|---|
| Light ash | | | **F007**102**422** | 201 | **F007**102**422**<br>**F007**108**659** | 201 |
| Dark ash | | | **F007**102**428** | 201 | **F007**102**428**<br>**F007**108**660** | 201 |

[1] NL 550 comprises a foil holder and levelling element. Please order both article numbers.

## PAGE REFERENCES


| | | | | | |
|---|---|---|---|---|---|
| Drawer sides | 11 | Add-on systems | 64 | Assembly technology | 124 |
| Slides | 50 | Tavinea Sorto | 104 | Assembly aids | 128 |
| Flat packs | 58 | Installation information | 108 | Packaging code | 131 |

**1** **Knife block**

**2** **Spice rack**

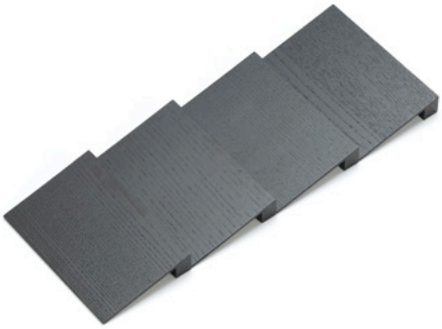

**3** **Foil holder**

## LEGEND

| | |
|---|---|
| NL | Nominal length |

# TAVINEA SORTO
Installation information

## APPLICATION EXAMPLES

### KB 450

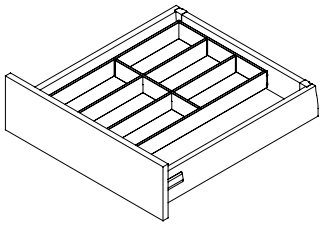

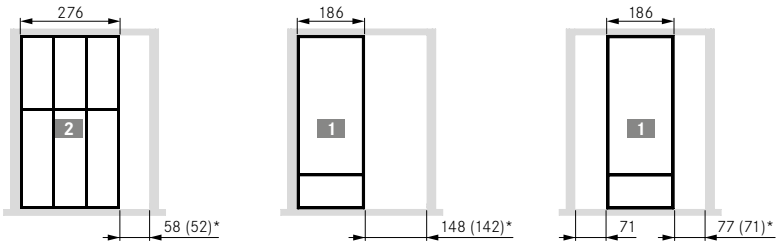


### KB 600

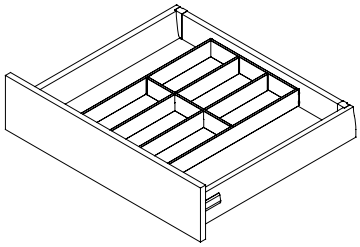

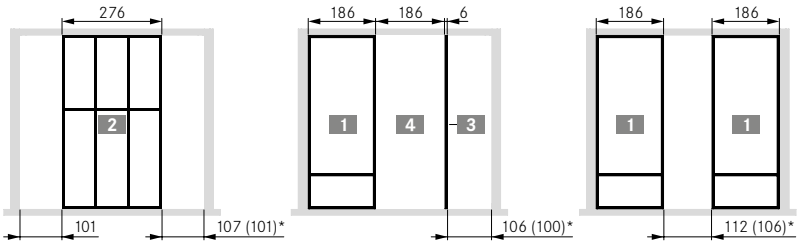


### KB 900

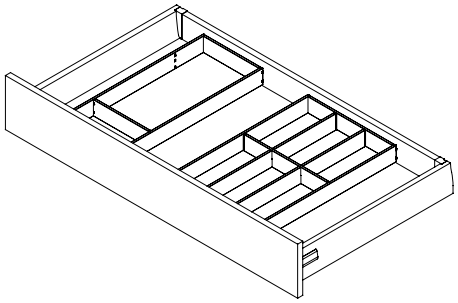

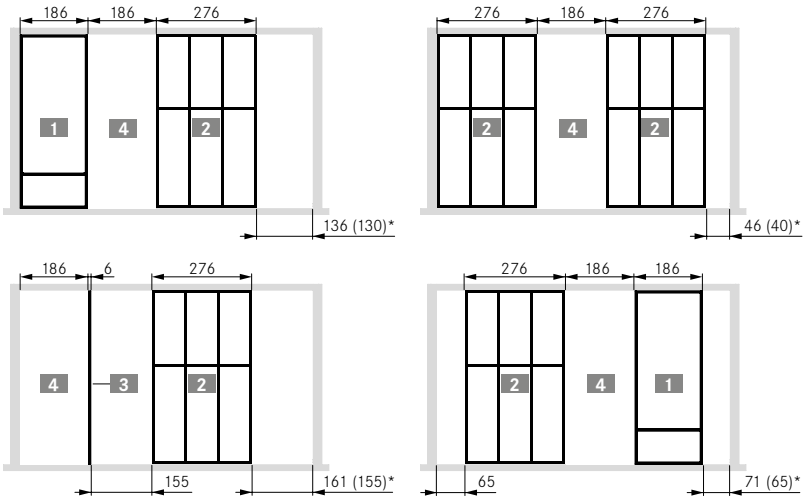


### KB 1200

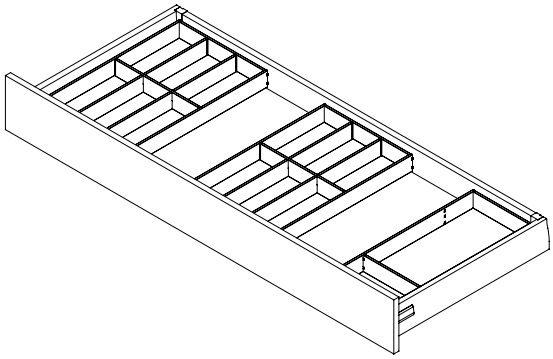

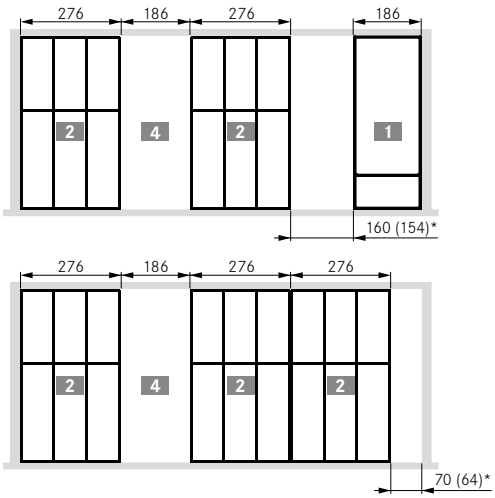


* S16 (S19)

## APPLICATION EXAMPLE

Description

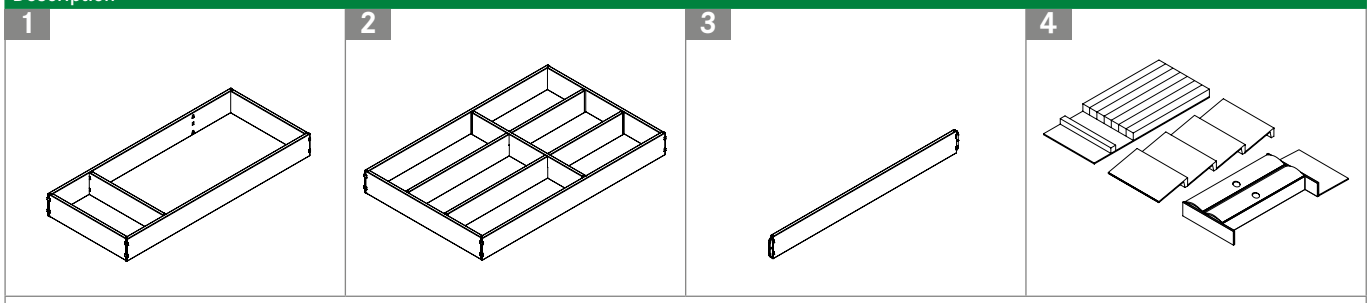


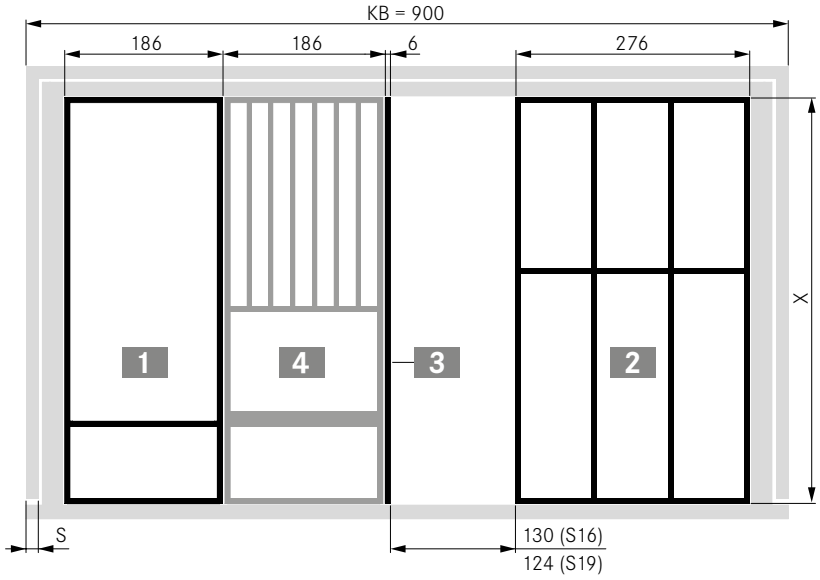


| NL | X |
|---|---|
| 350 | 322 |
| 400 | 372 |
| 450 | 422 |
| 500 | 472 |
| 550 | 523 |
| 600 | 573 |
| 650 | 623 |

## INSTALLATION INFORMATION

Description

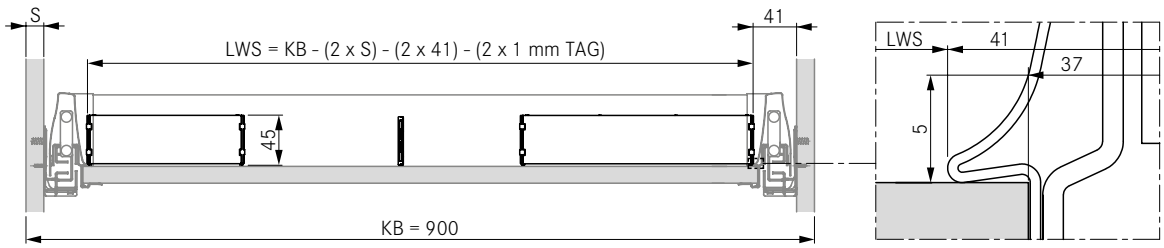


| S | External cabinet width (KB) | | | | | | | | | |
|---|---|---|---|---|---|---|---|---|---|---|
| | 300 | 400 | 500 | 600 | 700 | 800 | 900 | 1000 | 1100 | 1200 |
| 16 | 184 | 284 | 384 | 484 | 584 | 684 | 784 | 884 | 984 | 1084 |
| 18 | 180 | 280 | 380 | 480 | 580 | 680 | 780 | 880 | 980 | 1080 |
| 19 | 178 | 278 | 378 | 478 | 578 | 678 | 778 | 878 | 978 | 1078 |
| | Internal dimension (LWS) | | | | | | | | | |

## LEGEND

| | |
|---|---|
| KB | Cabinet width |
| LWS | Clear drawer width |
| NL | Nominal length |
| S | Cabinet side wall |
| TAG | Tolerance compensation |

# ORGANISING SYSTEMS
## Magic Sorto

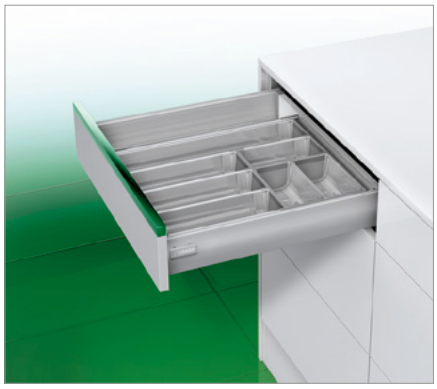

- Perfect organisation, for cutlery and small parts drawers
- High-quality stainless steel trays
- LGA-certified, hygiene-tested, non-toxic and dishwasher-proof
- Modular extension possible
- Without frame
- Variable tray arrangement possible

**Packaging unit (PU):**
201 = 1 unit in cardboard box
205 = 6 units in a cardboard box
207 = 10 units in a cardboard box
213 = 25 units in a cardboard box

## ORDER INFORMATION

**1 Magic Sorto set B3**
**Set**

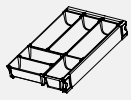

| NL | Aluminium metallic | |
|---|---|---|
| | Art.-no. | PU |
| 500 | **F092075619** | 201 |

**2 Magic Sorto set B4 S**
**Set**

| NL | Aluminium metallic | |
|---|---|---|
| | Art.-no. | PU |
| 500 | **F092075635** | 201 |

**3 Magic Sorto divider rail**
**Single item**

| NL | Aluminium metallic | |
|---|---|---|
| | Art.-no. | PU |
| 500 | **F092075648** | 213 |

**4 Magic Sorto trays**
**Single item**

| L | Aluminium metallic | |
|---|---|---|
| | Art.-no. | PU |
| 180 | **F092075663** | 207 |
| 270 | **F092075666** | 205 |

## PAGE REFERENCES


| | | | | | |
|---|---|---|---|---|---|
| Drawer sides | 11 | Add-on systems | 64 | Assembly technology | 124 |
| Slides | 50 | Accessories | 70 | Assembly aids | 128 |
| Flat packs | 58 | Application examples | 72 | Packaging code | 131 |

## INSTALLATION INFORMATION

All dimensions in millimetres

Magic Sorto B3

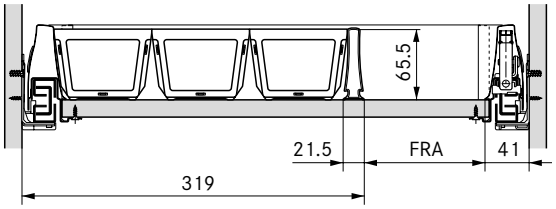


Magic Sorto B4 S

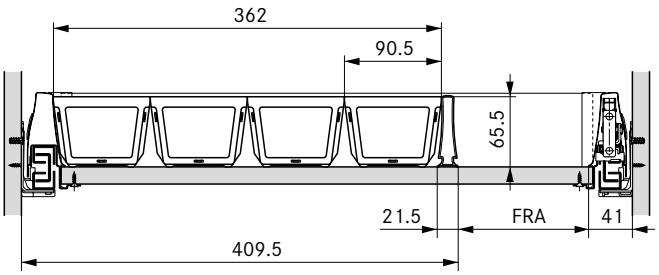


## LAYOUT OPTIONS

**Magic Sorto set NL 500 B3**
**NL 500 and cabinet widths from 450 mm**

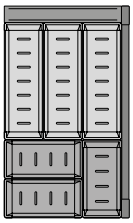

Consisting of:

3 trays 270 x 90 mm
3 trays 180 x 90 mm
1 spacer bar 270 mm
1 spring-loaded divider rail

**Magic Sorto set NL 500 B4S**
**NL 500 and cabinet widths from 600 mm**

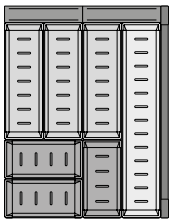

Consisting of:

1 tray 450 x 90 mm
3 trays 270 x 90 mm
3 trays 180 x 90 mm
2 spacer bars 180 mm
1 spring-loaded divider rail

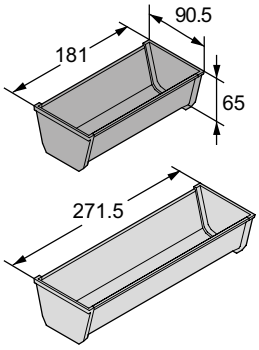


Exploded view drawing

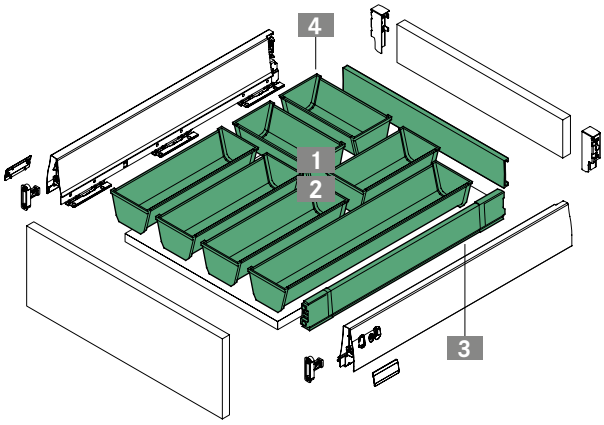


## LEGEND

| | |
|---|---|
| FRA | Spare space |
| L | Length |
| NL | Nominal length |

# DIVIDING SYSTEMS

## Magic Optima for pot drawer division

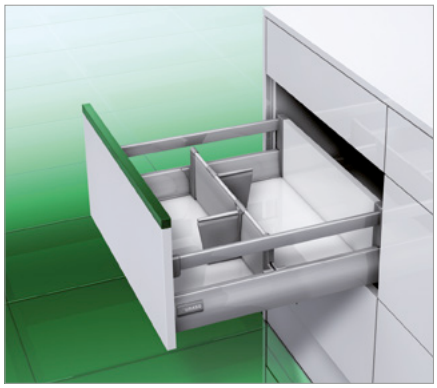

- For use with round railing, rectangular railing, Variowing and Magic Top
- Not to be used with Duowing

**Packaging unit (PU):**
207 = 10 units in a cardboard box
211 = 20 units in a cardboard box
511 = 20 units in PE in a cardboard box
516 = 40 units in PE in a cardboard box

## ORDER INFORMATION

**1 Magic Optima profile clip H95**
**Single item: Can be used on left/right**

| H | Aluminium metallic | | | | White | | | | Stone | | | | | | | |
|---|---|---|---|---|---|---|---|---|---|---|---|---|---|---|---|---|
| | Art.-no. | PU | | | Art.-no. | PU | | | Art.-no. | PU | | | | | | |
| 95 | **F092101577** | 516 | | | **F092100488** | 516 | | | **F092136394** | 516 | | | | | | |

**2 Magic Optima Smartboard**
**Single item**

| | Aluminium metallic | | | | White | | | | Stone | | | | | | | |
|---|---|---|---|---|---|---|---|---|---|---|---|---|---|---|---|---|
| | Art.-no. | PU | | | Art.-no. | PU | | | Art.-no. | PU | | | | | | |
| | **F092075826** | 511 | | | **F102100670** | 211 | | | **F102102838** | 211 | | | | | | |

**3 Magic Optima divider profile**
**Single item: For cutting to length**

| L | Aluminium metallic | | | | White | | | | Stone | | | | | | | |
|---|---|---|---|---|---|---|---|---|---|---|---|---|---|---|---|---|
| | Art.-no. | PU | | | Art.-no. | PU | | | Art.-no. | PU | | | | | | |
| 1072 | **F092075808** | 207 | | | **F092075809** | 207 | | | **F092136393** | 207 | | | | | | |

## PAGE REFERENCES


| | | | | | |
|---|---|---|---|---|---|
| Drawer sides | 11 | Add-on systems | 64 | Assembly technology | 124 |
| Slides | 50 | Accessories | 70 | Assembly aids | 128 |
| Flat packs | 58 | Application examples | 72 | Packaging code | 131 |

## INSTALLATION INFORMATION

All dimensions in millimetres

Installation dimensions

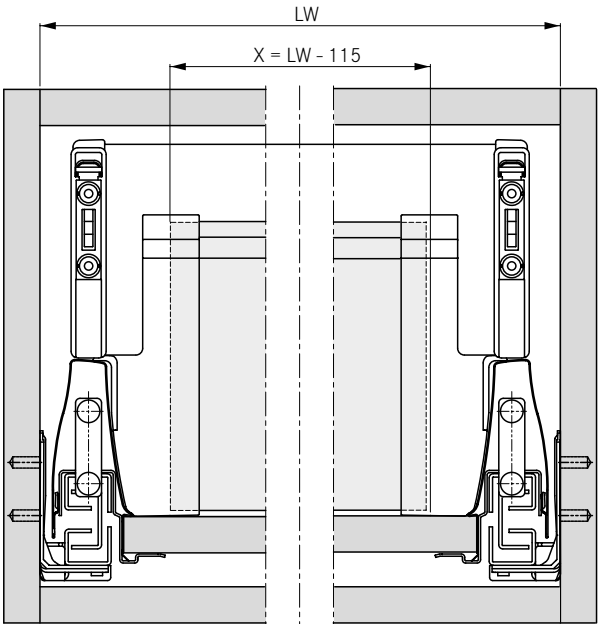


Exploded view drawing

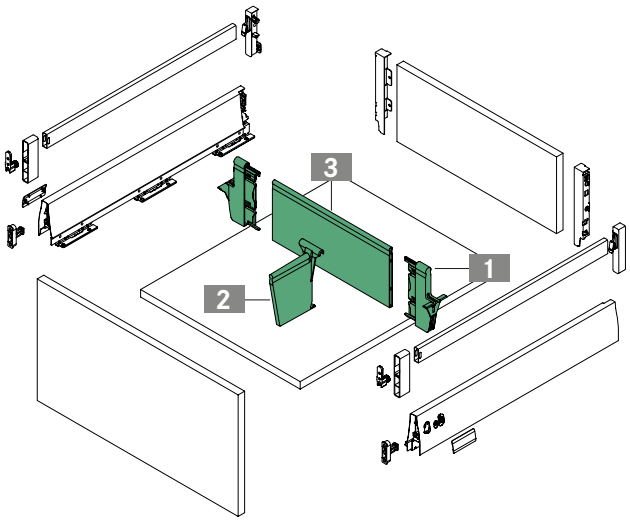


## LEGEND

| | |
|---|---|
| H | Height |
| L | Length |
| LW | Internal width |

# DIVIDING SYSTEMS

## Magic Optima for Variowing and round railing

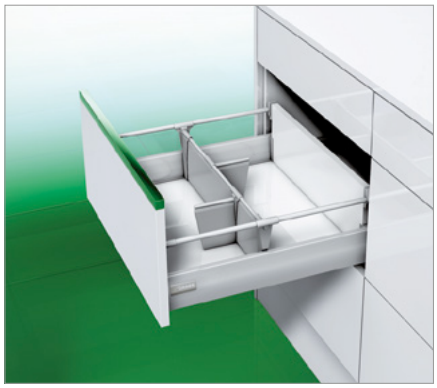

- Individual dividing system for pot drawers with drawer side height H95 and Variowing add-on system
- Organisation of storage space for better overview and order
- Easy installation without tools
- Tool-free adjustment for variable use of storage space
- Can be retrofitted at any time
- Colour coordinated with drawer side

**Packaging unit (PU):**
207 = 10 units in a cardboard box
211 = 20 units in a cardboard box
511 = 20 units in PE in a cardboard box
516 = 40 units in PE in a cardboard box

## ORDER INFORMATION

**1 Magic Optima profile clip for Variowing and round railing**
**Single item: Can be used on left/right**

| | Aluminium metallic | | White | | Stone | |
|---|---|---|---|---|---|---|
| | Art.-no. | PU | Art.-no. | PU | Art.-no. | PU |
| | **F092075823** | 516 | **F092076844** | 516 | **F092136395** | 516 |

**2 Magic Optima Smartboard**
**Single item**

| | Aluminium metallic | | White | | Stone | |
|---|---|---|---|---|---|---|
| | Art.-no. | PU | Art.-no. | PU | Art.-no. | PU |
| | **F092075826** | 511 | **F102100670** | 211 | **F102102838** | 211 |

**3 Magic Optima divider profile**
**Single item: For cutting to length**

| L | Aluminium metallic | | White | | Stone | |
|---|---|---|---|---|---|---|
| | Art.-no. | PU | Art.-no. | PU | Art.-no. | PU |
| 1072 | **F092075808** | 207 | **F092075809** | 207 | **F092136393** | 207 |

## PAGE REFERENCES


| | | | | | |
|---|---|---|---|---|---|
| Drawer sides | 11 | Add-on systems | 64 | Assembly technology | 124 |
| Slides | 50 | Accessories | 70 | Assembly aids | 128 |
| Flat packs | 58 | Application examples | 72 | Packaging code | 131 |

## INSTALLATION INFORMATION

All dimensions in millimetres

Installation dimensions

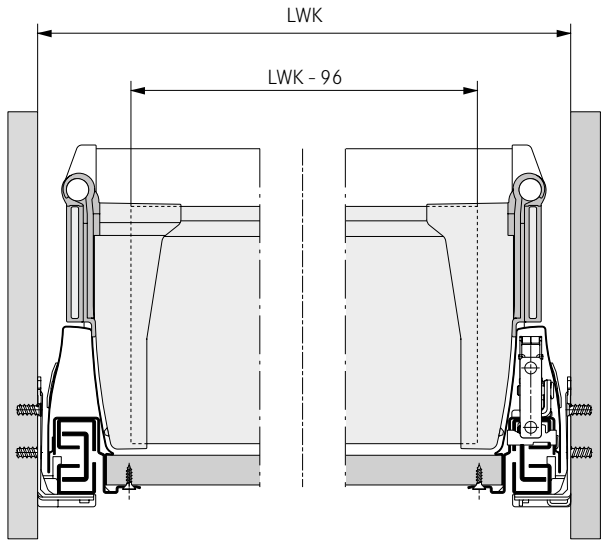


Installation

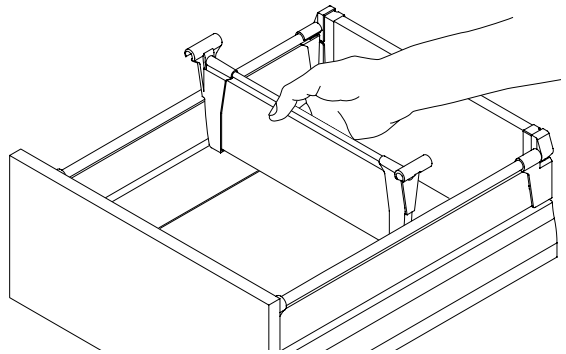

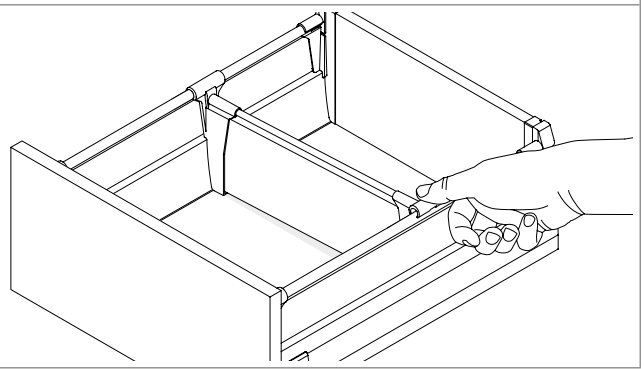

Exploded view drawing

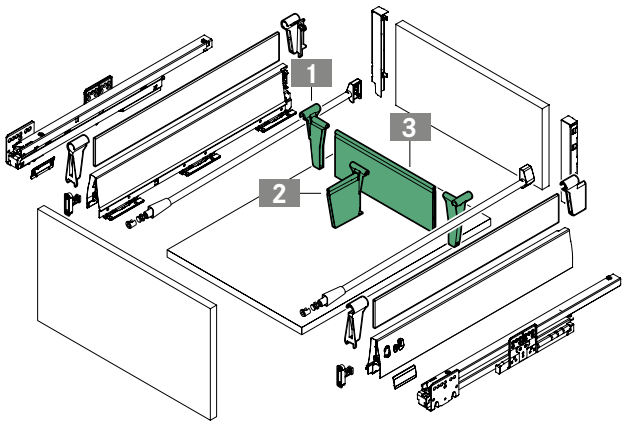


## LEGEND

| | |
|---|---|
| L | Length |
| LWK | Inside cabinet width |

# DIVIDING SYSTEMS

## Magic Optima for Duowing

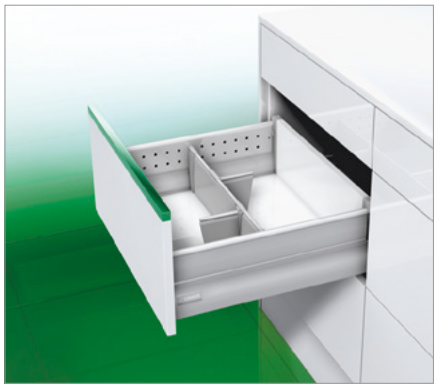

- Individual dividing system for pot drawers with drawer side height H95 and Duowing add-on system
- Organisation of storage space for better overview and order
- Easy installation without tools
- Tool-free adjustment for variable use of storage space
- Can be retrofitted at any time
- Colour coordinated with drawer side

**Packaging unit (PU):**
207 = 10 units in a cardboard box
211 = 20 units in a cardboard box
511 = 20 units in PE in a cardboard box
516 = 40 units in PE in a cardboard box

## ORDER INFORMATION

**1 Magic Optima profile clip Duowing**
**Single item: Can be used on left/right**

| | Aluminium metallic | | White | | Stone | |
|---|---|---|---|---|---|---|
| | Art.-no. | PU | Art.-no. | PU | Art.-no. | PU |
| | **F092075819** | 516 | **F092076845** | 516 | **F092136396** | 516 |

**2 Magic Optima Smartboard**
**Single item**

| | Aluminium metallic | | White | | Stone | |
|---|---|---|---|---|---|---|
| | Art.-no. | PU | Art.-no. | PU | Art.-no. | PU |
| | **F092075826** | 511 | **F102100670** | 211 | **F102102838** | 211 |

**3 Magic Optima divider profile**
**Single item: For cutting to length**

| L | Aluminium metallic | | White | | Stone | |
|---|---|---|---|---|---|---|
| | Art.-no. | PU | Art.-no. | PU | Art.-no. | PU |
| 1072 | **F092075808** | 207 | **F092075809** | 207 | **F092136393** | 207 |

## PAGE REFERENCES


| | | | | | |
|---|---|---|---|---|---|
| Drawer sides | 11 | Add-on systems | 64 | Assembly technology | 124 |
| Slides | 50 | Accessories | 70 | Assembly aids | 128 |
| Flat packs | 58 | Application examples | 72 | Packaging code | 131 |

## INSTALLATION INFORMATION

All dimensions in millimetres

| Installation dimensions | Installation |
|---|---|
| 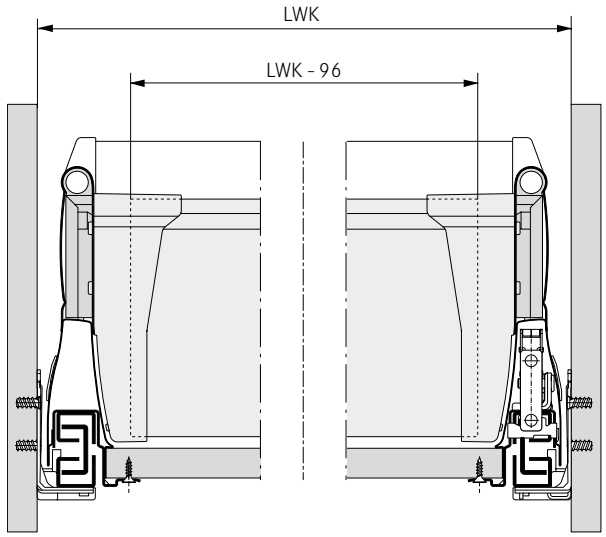  | 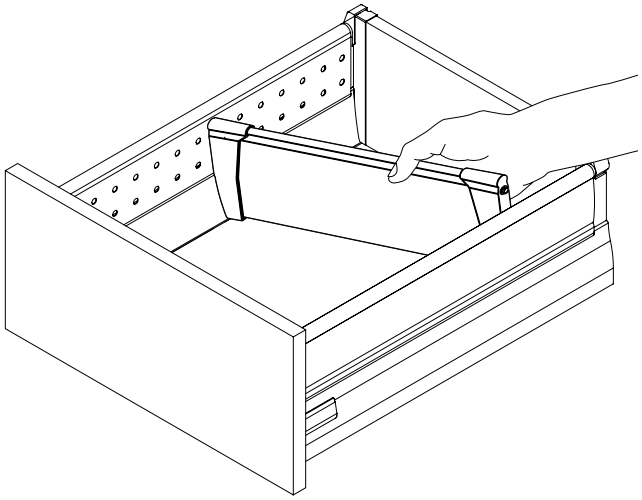 |

| Exploded view drawing | |
|---|---|
| 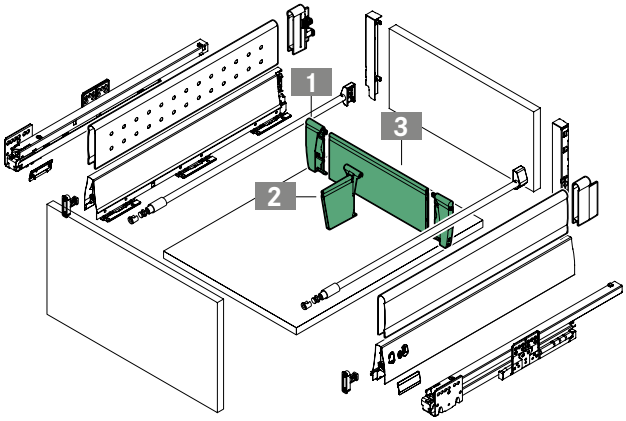  | |

## LEGEND

| | |
|---|---|
| L | Length |
| LWK | Inside cabinet width |

# DIVIDING SYSTEMS

## Magic Classic for Duowing

- Variable division of pot drawer H95 when using Duowing
- Fast, tool-free installation using spring/click connection
- Can be retrofitted at any time
- Tool-free adjustment
- Colour coordinated with drawer side
- Longitudinal and cross dividers for cutting to length

**Packaging unit (PU):**
513 = 25 units in PE in a cardboard box

## ORDER INFORMATION

**1 Magic Classic divider set for NL 500**

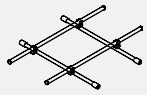

| KB | Aluminium metallic | | White | |
|---|---|---|---|---|
| | Art.-no. | PU | Art.-no. | PU |
| 600 | **F092075796** | 513 | **F092077405** | 513 |
| 1200 | **F092075793** | 513 | **F092077406** | 513 |

1 set for cabinet width 600 comprising:

- 2 longitudinal dividers
- 2 cross dividers
- 4 cross fittings

KB 600

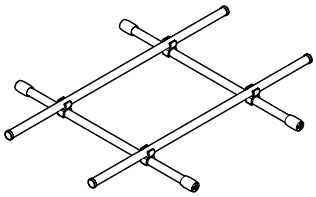

1 set for cabinet width 1200 comprising:

- 3 longitudinal dividers
- 2 cross dividers
- 6 cross fittings

KB 1200

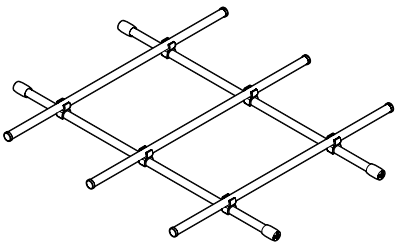

## PAGE REFERENCES


| | | | | | |
|---|---|---|---|---|---|
| Drawer sides | 11 | Add-on systems | 64 | Assembly technology | 124 |
| Slides | 50 | Accessories | 70 | Assembly aids | 128 |
| Flat packs | 58 | Application examples | 72 | Packaging code | 131 |

## INSTALLATION INFORMATION

All dimensions in millimetres

Installation dimensions

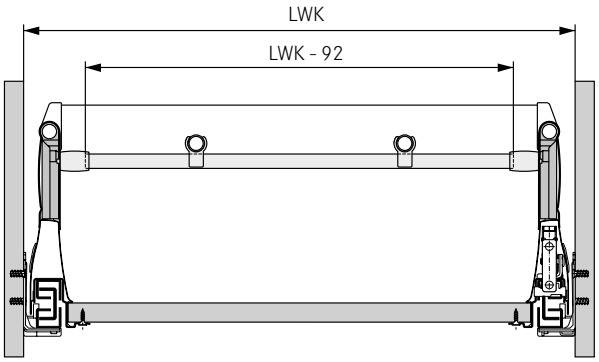


Installation

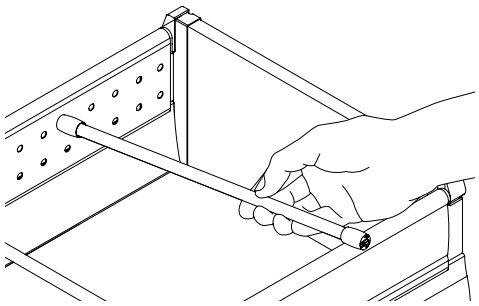

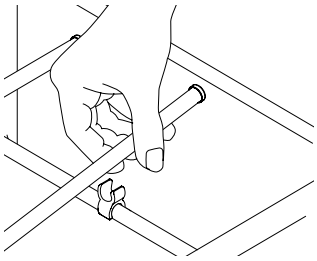

Cutting dimensions for longitudinal dividers

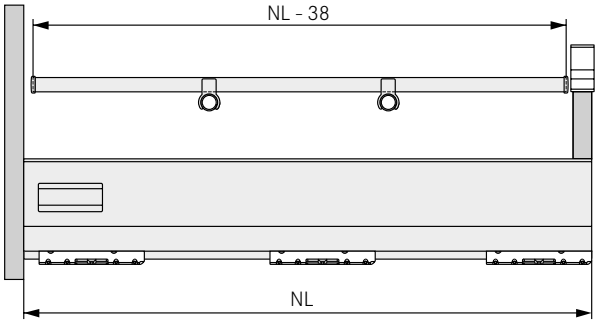


Exploded view drawing

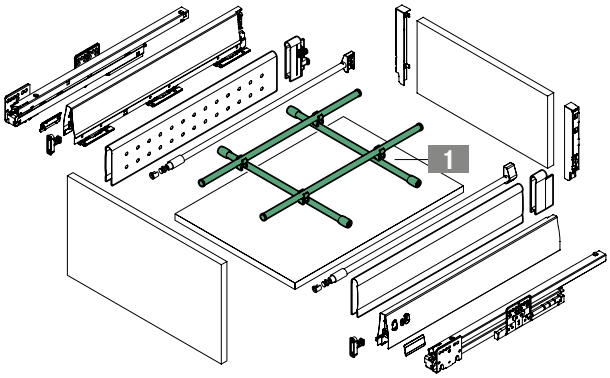


## LEGEND

| | |
|---|---|
| KB | Cabinet width |
| LWK | Inside cabinet width |
| NL | Nominal length |

# DIVIDING SYSTEMS

## Rectangular railing divider

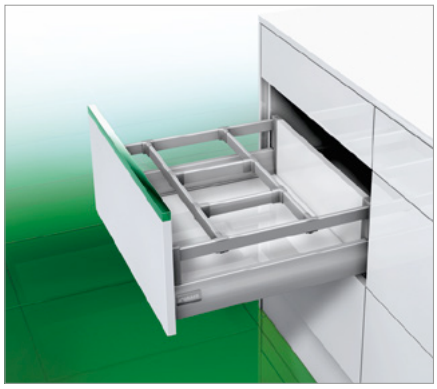

- Easy installation without tools
- Can be retrofitted at any time
- Tool-free adjustment in 25 mm grid
- Very strong
- Divider profile for cutting to length

**Packaging unit (PU):**
111 = 20 units in PE
211 = 20 units in a cardboard box

## ORDER INFORMATION

**1 Rectangular railing divider profile**
**Single item: For cutting to length**

| L | Aluminium metallic | | | | White | | | | Stone | | | | | | | |
|---|---|---|---|---|---|---|---|---|---|---|---|---|---|---|---|---|
| | Art.-no. | PU | | | Art.-no. | PU | | | Art.-no. | PU | | | | | | |
| 1150 | **F092077417** | 211 | | | **F092076916** | 211 | | | **F092136342** | 211 | | | | | | |

**2 Divider railing clip for rectangular railing**
**Single item: can be used on left/right**

| | Aluminium metallic | | | | White | | | | Stone | | | | | | | |
|---|---|---|---|---|---|---|---|---|---|---|---|---|---|---|---|---|
| | Art.-no. | PU | | | Art.-no. | PU | | | Art.-no. | PU | | | | | | |
| | **F092077414** | 211 | | | **F145096770** | 111 | | | **F092136401** | 211 | | | | | | |

## PAGE REFERENCES


| | | | | | |
|---|---|---|---|---|---|
| Drawer sides | 11 | Add-on systems | 64 | Assembly technology | 124 |
| Slides | 50 | Accessories | 70 | Assembly aids | 128 |
| Flat packs | 58 | Application examples | 72 | Packaging code | 131 |

## INSTALLATION INFORMATION

All dimensions in millimetres

Installation dimensions

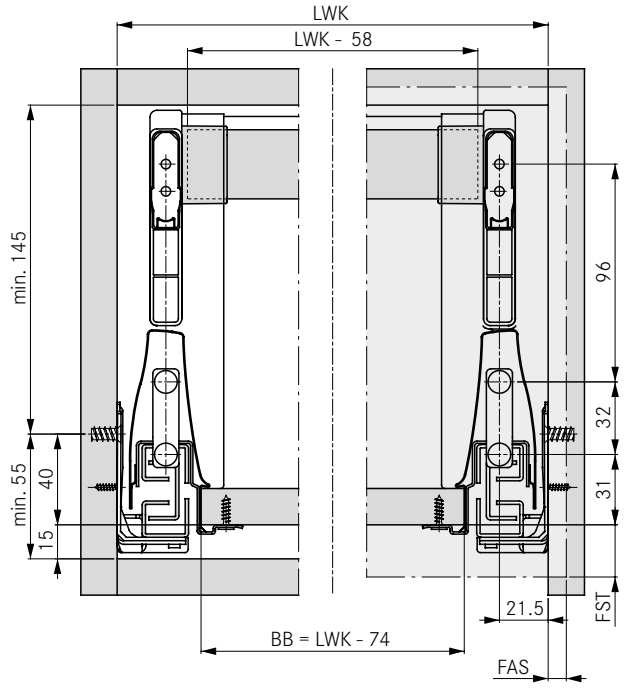


Cutting dimensions for longitudinal divider

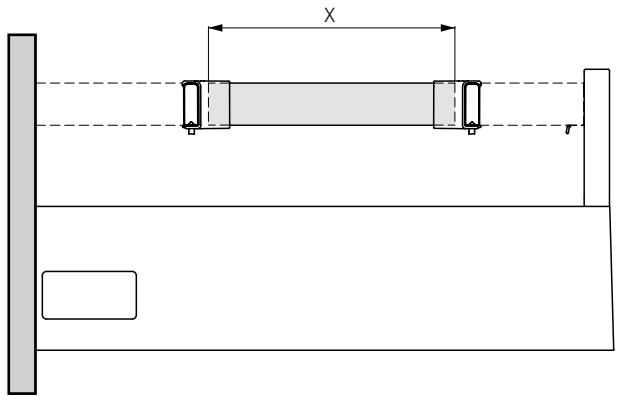


X = 181 mm (recommended), can be extended in 25 mm steps

Cutting dimensions for rectangular railing divider

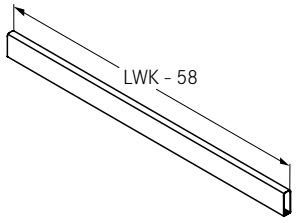


Exploded view drawing

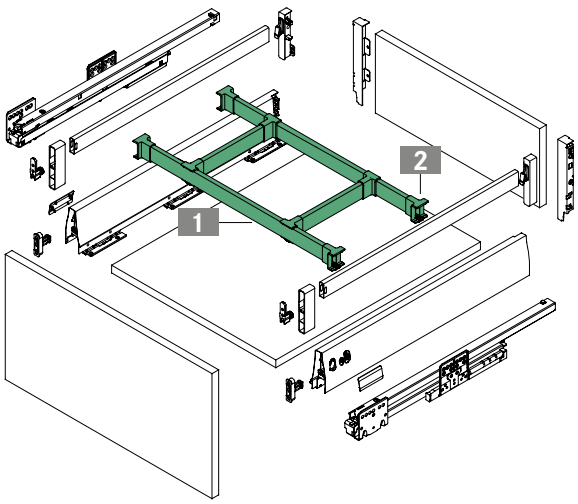


## LEGEND

| | |
|---|---|
| BB | Bottom panel width |
| FAS | Front overlay, side |
| FST | Front overlay |
| L | Length |
| LWK | Inside cabinet width |

# DIVIDING SYSTEMS

## Round cross railing divider and bottle holder

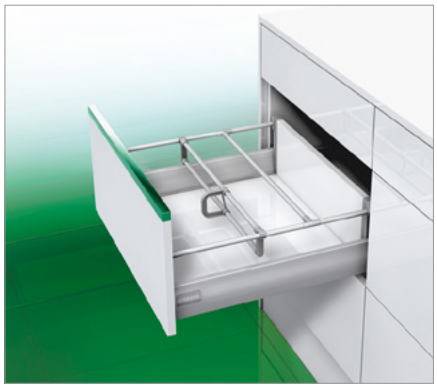

- Easy installation without tools
- Can be retrofitted at any time
- Tool-free variable adjustment
- Divider profile for cutting to length
- Extendable with double railing or bottle holder

**Packaging unit (PU):**
211 = 20 units in a cardboard box
223 = 100 units in a cardboard box
233 = 200 units in a cardboard box

## ORDER INFORMATION

**1 Round railing divider profile**
**Single item: For cutting to length**

| L | Aluminium metallic | | | | White | | | | Stone | | | |
|---|---|---|---|---|---|---|---|---|---|---|---|---|
| | Art.-no. | PU | | | Art.-no. | PU | | | Art.-no. | PU | | |
| 1150 | **F092082461** | 211 | | | **F092082479** | 211 | | | **F092136341** | 211 | 223 | |

**2 Cross railing clip, single**
**Single item: can be used on left/right**

| | Aluminium metallic | | | | White | | | | Stone | | | |
|---|---|---|---|---|---|---|---|---|---|---|---|---|
| | Art.-no. | PU | | | Art.-no. | PU | | | Art.-no. | PU | | |
| | **F092082484** | 233 | | | **F092071504** | 233 | | | **F092136398** | 233 | | |

**3 Cross railing clip, double**
**Single item: can be used on left/right**

| | Aluminium metallic | | | | White | | | | Stone | | | |
|---|---|---|---|---|---|---|---|---|---|---|---|---|
| | Art.-no. | PU | | | Art.-no. | PU | | | Art.-no. | PU | | |
| | **F092082486** | 223 | | | **F092071505** | 223 | | | **F092136399** | 223 | | |

**4 Bottle holder**
**Single item**

| | Aluminium metallic | | | | White | | | | Stone | | | |
|---|---|---|---|---|---|---|---|---|---|---|---|---|
| | Art.-no. | PU | | | Art.-no. | PU | | | Art.-no. | PU | | |
| | **F092082488** | 223 | | | **F092076842** | 223 | | | **F092136400** | 223 | | |

## PAGE REFERENCES


| | | | | | |
|---|---|---|---|---|---|
| Drawer sides | 11 | Add-on systems | 64 | Assembly technology | 124 |
| Slides | 50 | Accessories | 70 | Assembly aids | 128 |
| Flat packs | 58 | Application examples | 72 | Packaging code | 131 |

## INSTALLATION INFORMATION

All dimensions in millimetres

Installation dimensions H95

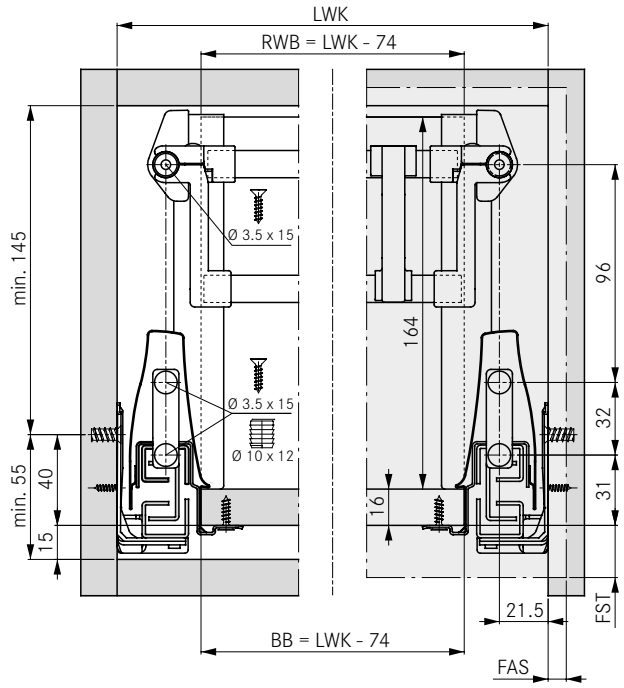


Cutting dimensions for round railing divider

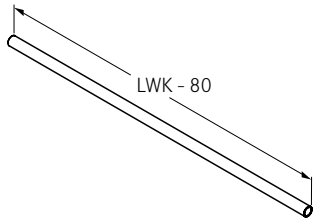


Exploded view drawing

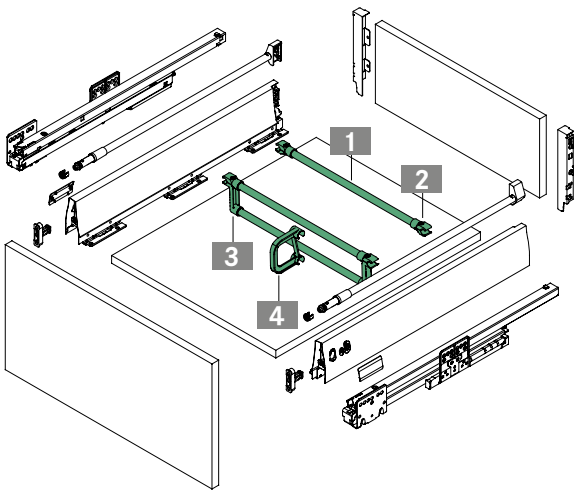


## LEGEND

| | |
|---|---|
| BB | Bottom panel width |
| FAS | Front overlay, side |
| FST | Front overlay |
| L | Length |
| LWK | Inside cabinet width |
| RWB | Width of back panel |

# TECMATOR ZP-XP

For industrial production of DWD XP regular and pot drawers

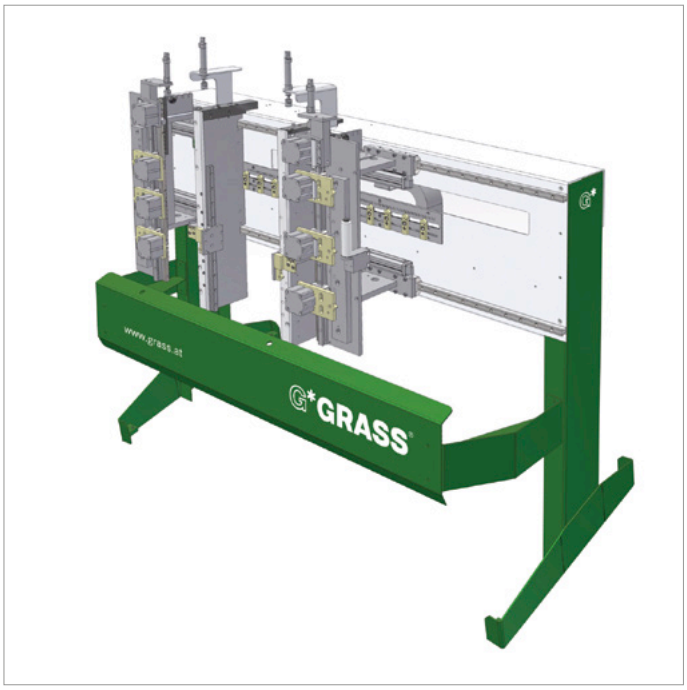


- Easy and straightforward handling of the individual parts on the machine
- For large series production
- Any required drawer width can be set
- Adjustment with pneumatic clamping
- Fast operating sequences
- Very sturdy frame construction
- All DWD XP lengths can be processed
- It is possible to process drawers and pull-outs for cabinet widths from 250 to 1200 mm
- Can be used for wooden and steel back panels
- Reset stops included as standard, can be set to customer requirements (12x)
- Pneumatic drive for closing, pressing and opening action

## ORDER INFORMATION

| Designation | Art.-no. | PU |
|---|---|---|
| Tecmator ZP-XP | **F146**083**263** | 801 |

## DWD XP

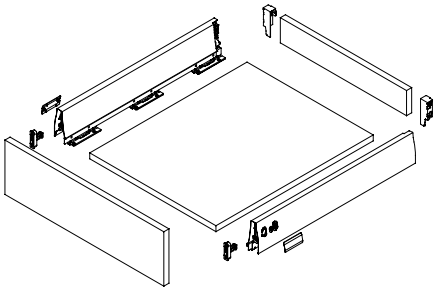

## ADVANTAGES

Easy width adjustment thanks to pneumatic clamping

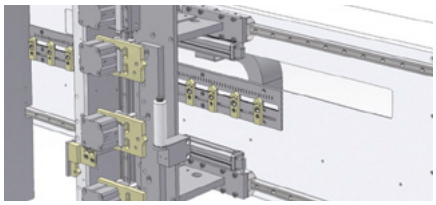

Easy, straightforward handling of individual parts.

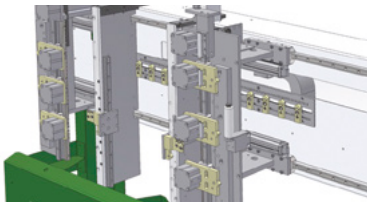

The frame structure ensures excellent stability

## PAGE REFERENCES


| | | | | | |
|---|---|---|---|---|---|
| Drawer sides | 11 | Add-on systems | 64 | Technical information | 76 |
| Slides | 50 | Accessories | 70 | Assembly aids | 128 |
| Flat packs | 58 | Application examples | 72 | Packaging code | 131 |

## TECHNICAL DATA

| Connections | |
|---|---|
| Pneumatic | 6 bar dry |

| Dimensions | |
|---|---|
| Width | 2.00 m |
| Depth | 1.00 m |
| Height | 1.75 m |

| Weight | |
|---|---|
| ZP-XP | 320 kg |

## LEGEND

# TECMATOR ZMV-TP4

Semi-automatic assembly of regular and pot drawers

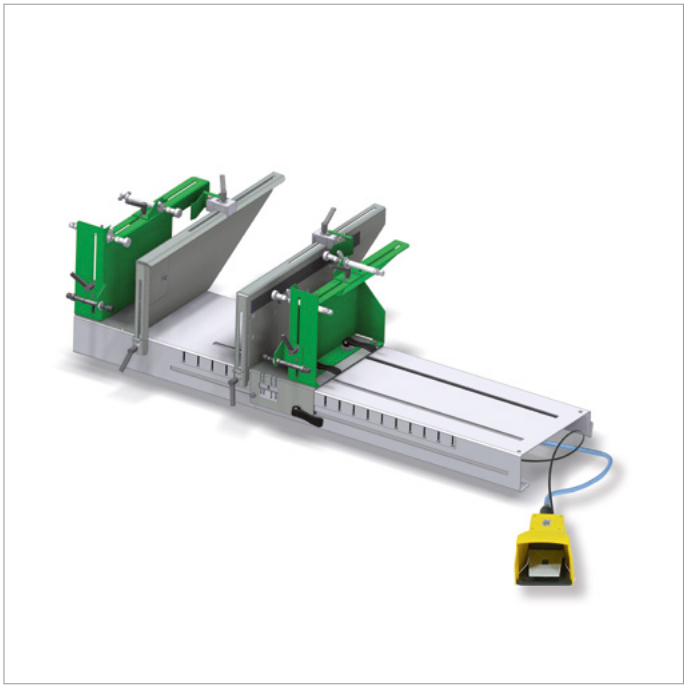

- Pneumatic table-top machine (up to a drawer width of 250 mm) for all GRASS slide systems: Nova Pro, DWD XP, Vionaro and Integra
- Drawers with an external cabinet width of up to 1200 mm can be processed with the ZMV-TP4
- Easy and straightforward handling
- Sturdy construction
- For small series production
- Pneumatic control system
- High performance

## ORDER INFORMATION

| Designation | Art.-no. | PU |
|---|---|---|
| Tecmator ZMV-TP4 | **F146**108**668** | 201 |

## DWD XP

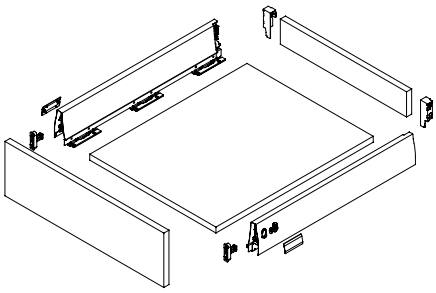

## NOVA PRO

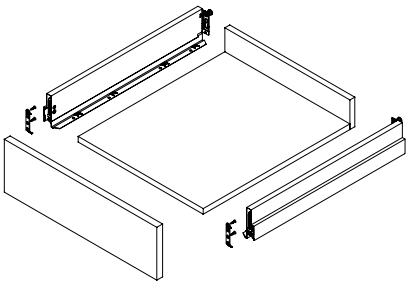

## VIONARO

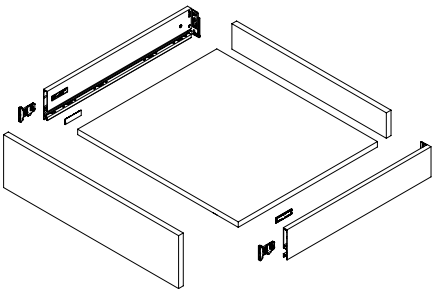

## ADVANTAGES

Tool-free setting

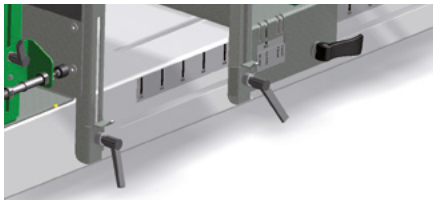

Sturdy base frame with pneumatic closing mechanism

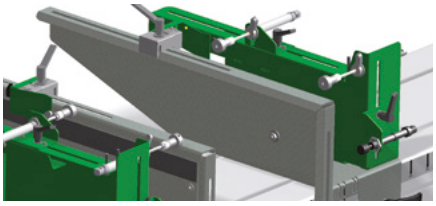

All GRASS drawer systems can be processed

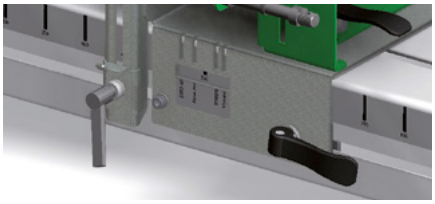

## PAGE REFERENCES


| | | | | | |
|---|---|---|---|---|---|
| Drawer sides | 11 | Add-on systems | 64 | Technical information | 76 |
| Slides | 50 | Accessories | 70 | Assembly aids | 128 |
| Flat packs | 58 | Application examples | 72 | Packaging code | 131 |

## TECHNICAL DATA

| Connections | |
|---|---|
| Pneumatic | 6 bar |

| Dimensions | |
|---|---|
| Width | 1.62 m |
| Depth | 0.90 m |
| Height | 0.50 m |

| Weight | |
|---|---|
| ZMV-TP4 | 65 kg |

## LEGEND

## DRAWER CLAMP

For easy assembly of drawers and pull-outs up to a cabinet width of 1200 mm.
Can be used for all drawer side heights.

| | Art.-no. | PU |
|---|---|---|
| Drawer clamp | **F146**108**833** | 201 |

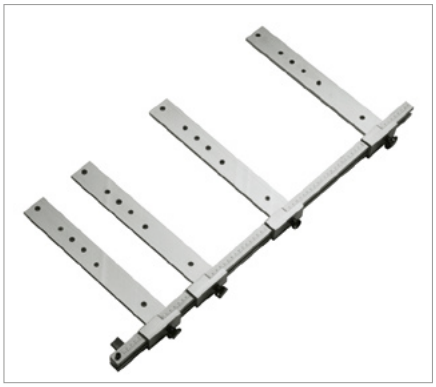

## DRILLING JIG FOR CABINET MEMBER

One set includes:

- Guide rule (1x)
- Marking elements (4x)
- Stop plates B + C (1 each)

A. Reading edge = centre of hole
B. Stop plate for loose cabinet parts
C. Stop plate for assembled cabinet
O. Zero scale position

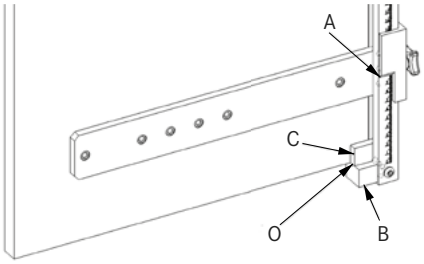


| | Art.-no. | PU |
|---|---|---|
| | **F146**094**730** | 501 |

## INDIVIDUAL MARKING ELEMENT

For extending the drilling jig for cabinet member F146094730.

| | Art.-no. | PU |
|---|---|---|
| | **F146**094**721** | 299 |

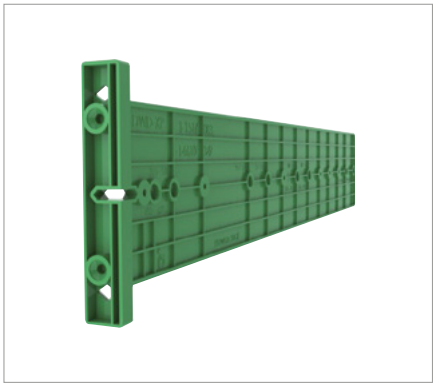

## DRILLING JIG FOR CABINET MEMBER

For use with pilot drill bit F146035692.

| | Art.-no. | PU |
|---|---|---|
| | **F146**101**347** | 507 |

## PAGE REFERENCES


| | | | | | |
|---|---|---|---|---|---|
| Drawer sides | 11 | Add-on systems | 64 | Technical information | 76 |
| Slides | 50 | Accessories | 70 | Assembly technology | 124 |
| Flat packs | 58 | Application examples | 72 | Packaging code | 131 |

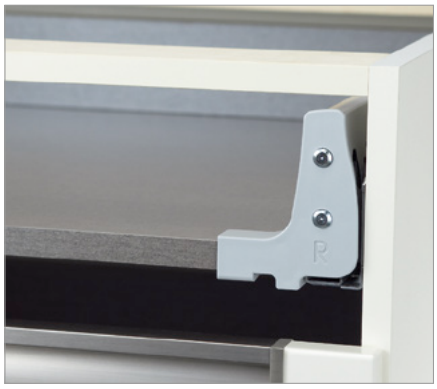

## DWD XP MARKING JIG SET

Marking jig set for DWD XP front holder.

One set includes:

- Marking jig - left
- Marking jig - right
- Marker points (4x)

| | Art.-no. | PU |
|---|---|---|
| | **F146083256** | 101 |

## DWD XP FRONT DRILLING JIG

Front drilling jig for DWD XP front holder, railing and add-on systems.

| | Art.-no. | PU |
|---|---|---|
| | **F146083259** | 201 |

## DWD XP F8 FRONT DRILLING JIG

For pre-drilling the F8 inset panel.

| | Art.-no. | PU |
|---|---|---|
| | **F146101057** | 201 |

## DWD XP RAILING DRILLING JIG

For DWD XP railing.

| | Art.-no. | PU |
|---|---|---|
| | **F146083261** | 101 |

## LEGEND

# PACKAGING CODE
Explanation

Arcticle Number — Packaging Code

**F123456789 2 01**

Type of packaging — Packaging unit

## TYPE OF PACKAGING

| Code | Explanation |
|---|---|
| 1 | PE (bag, film or band) |
| 2 | Cardboard box |
| 3 | Reusable packaging (cardboard) |
| 4 | Reusable packaging (different containers) |
| 5 | PE (bag, film or band) in cardboard box |
| 6 | Cardboard box in cardboard box |
| 7 | Cardboard box in various containers |
| 8 | PE (bag, film or band) in different containers |

## PACKAGING UNIT

| Code | Unit | Code | Unit | Code | Unit |
|---|---|---|---|---|---|
| 01 | 01 | 23 | 100 | 45 | 800 |
| 02 | 02 | 24 | 120 | 46 | 900 |
| 03 | 04 | 25 | 125 | 47 | 1000 |
| 04 | 05 | 26 | 136 | 48 | 1100 |
| 05 | 06 | 27 | 140 | 49 | 1200 |
| 06 | 08 | 28 | 150 | 50 | 1500 |
| 07 | 10 | 29 | 170 | 51 | 2000 |
| 08 | 12 | 30 | 175 | 52 | 2200 |
| 09 | 14 | 31 | 180 | 53 | 2500 |
| 10 | 15 | 32 | 190 | 54 | 3000 |
| 11 | 20 | 33 | 200 | 55 | 4000 |
| 12 | 24 | 34 | 225 | 56 | 5000 |
| 13 | 25 | 35 | 240 | 57 | 6000 |
| 14 | 30 | 36 | 250 | 58 | 7000 |
| 15 | 35 | 37 | 275 | 59 | 8000 |
| 16 | 40 | 38 | 300 | 60 | 9000 |
| 17 | 50 | 39 | 400 | 61 | 10000 |
| 18 | 60 | 40 | 500 | 62 | 15000 |
| 19 | 70 | 41 | 550 | 63 | 20000 |
| 20 | 75 | 42 | 600 | 64 | 30000 |
| 21 | 80 | 43 | 700 | 99 | X |
| 22 | 85 | 44 | 750 | | |

## QUICK OVERVIEW

| Packaging code | Explanation |
|---|---|
| 101 | 1 unit in PE (bag, film or band) |
| 103 | 4 units in PE (bag, film or band) |
| 107 | 10 units in PE (bag, film or band) |
| 111 | 20 units in PE (bag, film or band) |
| 116 | 40 units in PE (bag, film or band) |
| 123 | 100 units in PE (bag, film or band) |
| 147 | 1000 units in PE (bag, film or band) |
| 201 | 1 unit in a cardboard box |
| 203 | 4 units in a cardboard box |
| 204 | 5 units in a cardboard box |
| 205 | 6 units in a cardboard box |
| 207 | 10 units in a cardboard box |
| 211 | 20 units in a cardboard box |
| 213 | 25 units in a cardboard box |
| 214 | 30 units in a cardboard box |
| 217 | 50 units in a cardboard box |
| 218 | 60 units in a cardboard box |
| 223 | 100 units in a cardboard box |
| 233 | 200 units in a cardboard box |
| 239 | 400 units in a cardboard box |
| 261 | 10000 units in a cardboard box |
| 299 | X units in a cardboard box |
| 501 | 1 unit in PE (bag, film or band) in a cardboard box |
| 507 | 10 units in PE (bag, film or band) in a cardboard box |
| 511 | 20 units in PE (bag, film or band) in a cardboard box |
| 513 | 25 units in PE (bag, film or band) in a cardboard box |
| 516 | 40 units in PE (bag, film or band) in a cardboard box |
| 517 | 50 units in PE (bag, film or band) in a cardboard box |
| 523 | 100 units in PE (bag, film or band) in a cardboard box |
| 607 | 10 units in a cardboard box in a cardboard box |
| 801 | 1 unit in PE (bag, film or band) in different containers |

## TERMS

| | |
|---|---|
| Unit | X single items/sets in specific packaging |
| Single item | X parts of one type (e.g. installation hooks only) |
| Set | X parts of different types (e.g. railing, railing bracket (front/back) and cover cap, one of each left/right) |

F147102888001 – 07|2019 – EN – **GRASS Advertising** – Subject to changes, setting and printing errors

G*GRASS®

GRASS GmbH
Movement Systems
Grass Platz 1
6973 Höchst, Austria
T +43 5578 701-0
F +43 5578 701-59
info@grass.eu

www.grass.eu

Status: 07/2019
The latest version of the catalogue
is available on our website.